ambient SYSTEM

We make everyday life safer

PRODUCT CATALOG

Public Address & Voice Evacuation Systems

Compliance with EN 54-16 / EN 54-4 / EN 54-24

Contents

Ambient System

ABOUT US 5
PORTFOLIO 6
SECURITY COMMUNICATION PLATFORM 7
EXAMPLE APPLICATION 8

smartVES

INTRODUCTION 11
CONTROL UNITS 13
AMPLIFIERS AND POWER SUPPLY 17
ADAPTIVE DEVICES 21
MICROPHONES 27
EXCHANGEABLE CARDS AND MODULES 29
SYSTEM CONFIGURATION 33

miniVES/midiVES

GENERAL INFORMATION 37
SYSTEM COMPARISON 39
EXAMPLES OF IMPLEMENTATIONS 41

Additional Devices

SUPPLEMENTARY PRODUCTS 45

IP Intercom System

INTRODUCTION 65
GATEWAYS AND SERVERS 67
IP AUDIO INTERCOMS 71
INTERCOM HOUSINGS 85
DESKTOP STATIONS 87
IP AMPLIFIERS 91
SIP LOUDSPEAKERS 93

Yellow

SECURITY SYSTEM MANAGEMENT 101

Loudspeakers

VOICE ALARM LOUDSPEAKERS 105
VOICE ALARM A/B LOUDSPEAKERS 153
SPECIAL APPLICATION LOUDSPEAKERS 161
SIP LOUDSPEAKERS 183
PUBLIC ADDRESS LOUDSPEAKERS 189
PUBLIC ADDRESS POWER AMPLIFIERS 205

About us

Ambient System is **leading Polish provider of modern PA/VA systems** to clients worldwide. Our projects range from complex installations such as **refineries, airports, stadiums, tunnels and shopping centres** to medium and small structures like **hospitals, train stations, hotels, office buildings, supermarkets or schools**.

proven and reliable technology – we've been delivering PA/VA systems for over 10 years

digital, scalable & cost-effective solutions compliant with Fire Safety industry standard EN-54

professional acoustic simulations and PA/VA systems design

innovative solutions tailored to client needs

full ownership of our product cycle – design, solution development, quality testing and implementation support – all in ONE place

technical expertise and specialist engineering skills

CONTACT

HEADQUARTERS

AMBIENT SYSTEM Sp. z o. o.
ul. Bysewska 27 | 80-298 Gdańsk | Poland
T: +48 58 345 51 95
ambient@ambientsystem.pl

SALES

sales@ambientsystem.pl

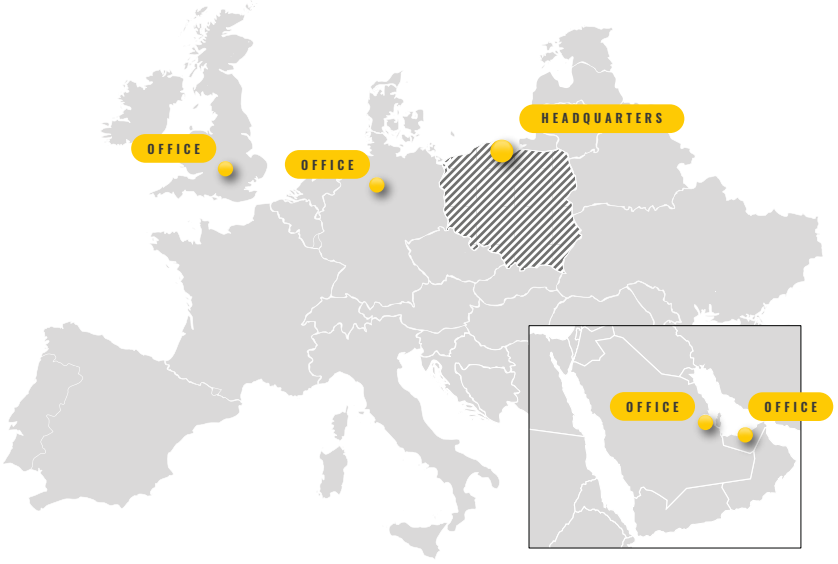

Portfolio

Varso Tower
Warsaw, Poland

Mercure Szczyrk Resort
Szczyrk, Poland

Gorzow Arena
Gorzow Wielkopolski, Poland

World War II Museum
Gdansk, Poland

Gdansk Airport
Gdansk, Poland

Pomeranian Metropolitan Railway
Gdansk, Poland

Wroclaw Train Station
Wroclaw, Poland

Tunnel under Swina
Swinoujscie, Poland

Headquarters of Bank Santander
London, UK

BBC White City
London, UK

Security Forces Hospital
Rijad, Saudi Arabia

AFC Sunderland Stadium
Sunderland, UK

Opap Arena
Nea Filadelfeia, Greece

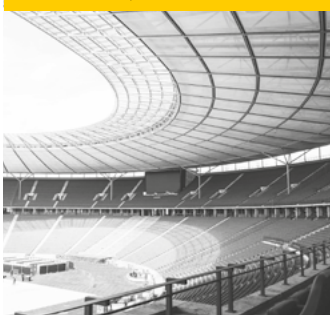

Delhi Metro
Delhi, India

Zeleznica Tunnel
Zeleznica, Bulgaria

Quassim Airport Terminal
Buraidah, Saudi Arabia

Security Communication Platform

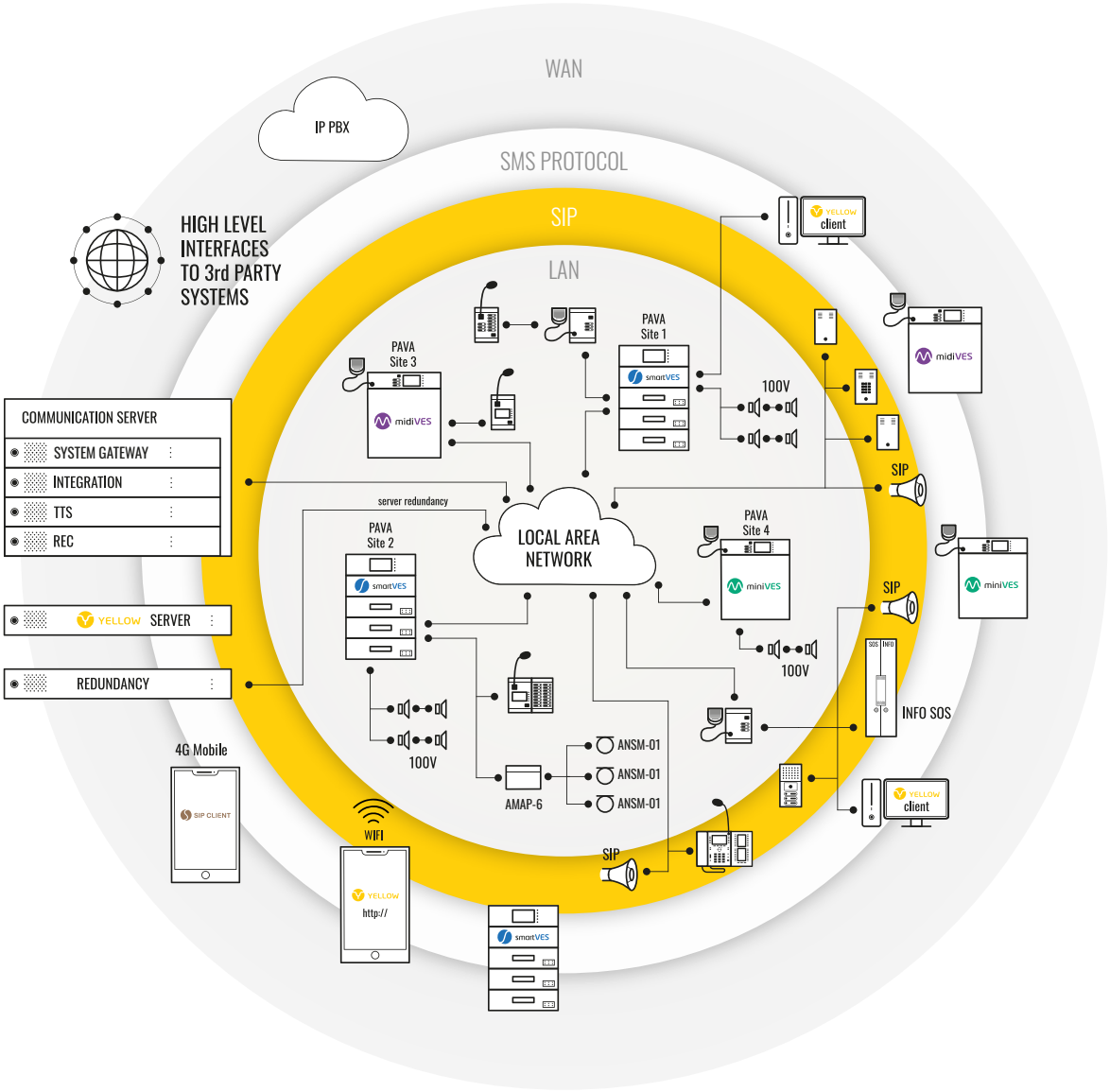

Modern facilities require an integrated approach into their security and communication systems. Ambient System presents an integrated solution that combines functionality of an **EN 54 certified Voice Alarm System**, **fully digital SIP Intercom system**, as well as a **visualization and management platform**, which shall allow to control over the above – and other systems – in one unified fully configurable Graphic User Interface (GUI).

The Ambient System Integrated Security Platform is **a perfect solution for various types of applications**, where the key requirement is to provide rapid response to any events. It allows the systems operators not only to quickly address the recipients, but also provides a means of two way communication. **The solution is dedicated primarily to public utility buildings, office complexes, medical facilities, industrial facilities and public transport facilities** – such as ship terminals, railway stations, metro and airports.

This comprehensive approach allows the user to more **easily manage the processes in the facility** and to take more **efficient and faster actions to eliminate possible threats**.

Example application

a. The system covers a **networked building complex**. Each building is equipped with a VA or sound system. Each of the buildings can be equipped with a local broadcasting station and / or Firefighter's microphone.

b. There is a **Control Center** within the facility. The operator is equipped with a **desktop paging station** in the form of a SIP Intercom and an operating console in the form of a touchscreen PC running the **YELLOW SI STANDARD application**.

c. In selected parts of the facility there are **intercom stations enabling two-way communication with the Operator** in the control center or selected employees positions.

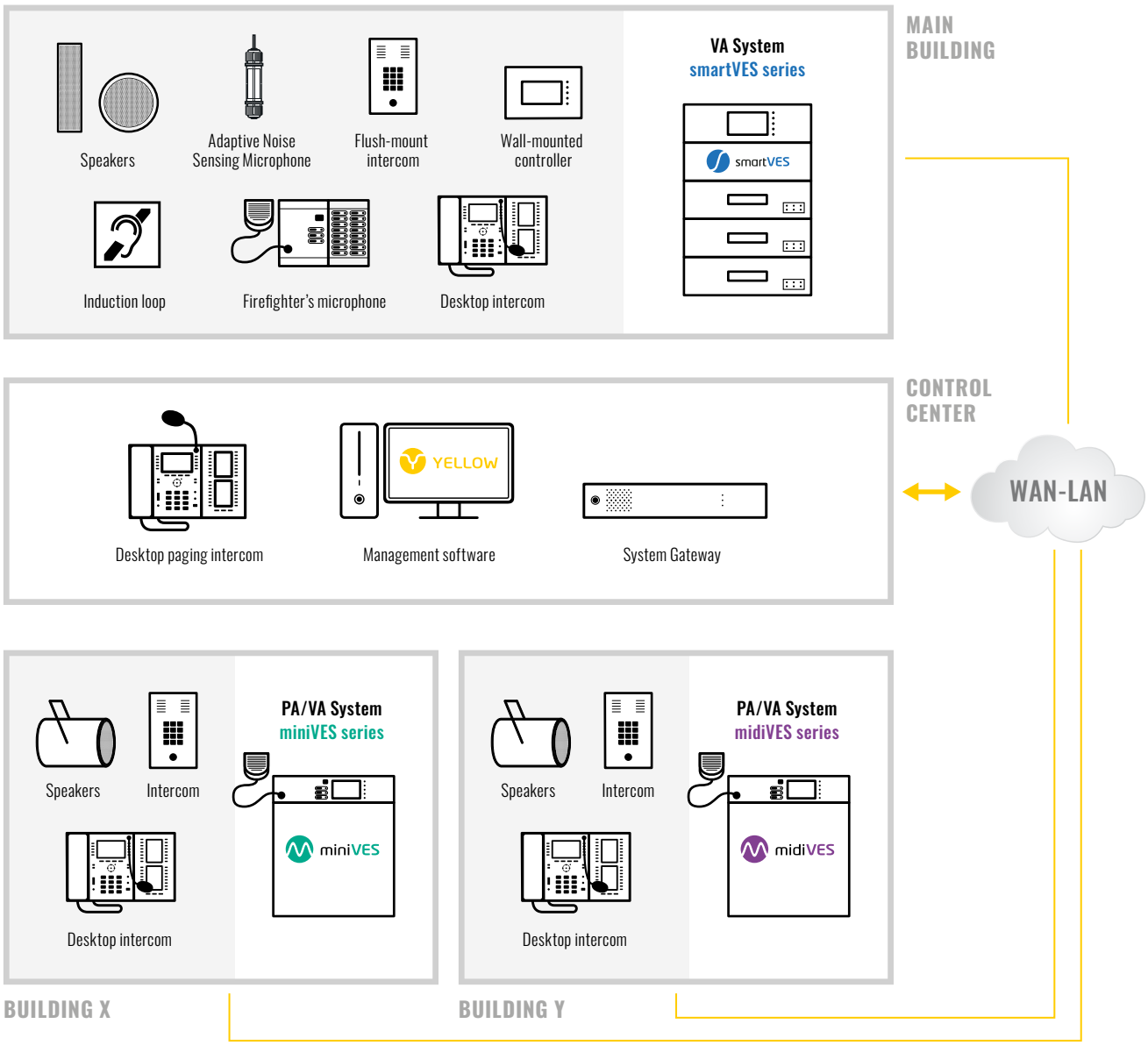

ambient
smartVES
SMART-DU1604
SMART-PA2650
SMART-PA2650
SMART-PA8080
10:18:53
2020-03-19
smartVES
SMART-CU-11LCD
smartVES
ABT-CU-11LT
ambient
SYSTEM
ABT-PF4
ABT-PSM48

smartVES

EN 54-16 | EN 54-4

1438-CPR-0948/W

Public Address & Voice Evacuation System

Introduction

SCALABLE INTELLIGENT PA&VES 11

Control Units

SMART-CU-LCD 13
SMART-CU-11LCD/LT 15

Amplifiers and Power Supply

SMART-PAX/E SERIES 17
SMART-PSM48/SERIAE 19
PS48800 19
PF4 19

Adaptive Devices

SMART-DU1604 21
SMART-AMAP-6 23
SMART-ANSM-01 25

Microphones

ABT-DFMS 27
ABT-DMS-LCD 27
ABT-DMS 27
ABT-EKB-20M 27
ABT-MO4N 28

Exchangeable Cards and Modules

SMART-XCTRLINE-44 29
ABT-XCPU 31
ABT-XNET-1GB/WAN/RS 31
ABT-XAUDIO-4/8-RS 31
ABT-XCTRLINE-2 31
ABT-XLOGOUT-8F/ABTXLOGOUT-8C 32
ABT-XLOGIN-8F/ABT-XLOGIN-8C 32
ABT-ISLE 32

System Configuration

SOFTWARE / SYSTEM EXAMPLES 33

Scalable Intelligent PA & VES

The smartVES system has been designed to offer exceptional versatility and it is therefore equally suitable for medium-range buildings as well as complex commercial structures such as train stations, airports, refineries, sport stadiums, shopping malls etc. The system's architecture is based on proven fibre-optic Ethernet connectivity between control units and other elements of the system thus enabling digital transmission of voice messages, including public address functions and music.

Its modular structure allows tailoring the design to meet clients' specific requirements with regard to design and development.

The main role of smartVES is to effectively warn the public of eminent danger thus allowing efficient evacuation. As the system works seamlessly with the Fire Alarm systems; its warning and informative functions can be either triggered automatically via the fire alarm system or manually using fireman microphones. The audible alarm system is designed to cover all areas of a building to reach its occupants in the event of an emergency.

The system fully complies with a European mandatory standard EN-54-16 (Fire detection and fire alarm systems; Components for fire alarm voice alarm systems; Voice alarm control and indicating equipment), which is also recognised in numerous countries outside of the European Union (e.g. Latin America, several of African and Asian countries).

The smartVES system comprises control devices, multi-channel amplifiers, fireman and zone microphones and 20-key extension keyboards. The system enables digital scaling of communications between all elements of the system and other integrated safety systems.

MAIN PARAMETERS OF THE SMARTVES SYSTEM:

- *Compliance with EN 54-16, EN 60849*
- *45 global audio channels*
- *Up to 254 units in the network*
- *Up to 32 GB SD flash memory card designated for playback and recording messages (48 kHz, 32 bit)*
- *Number of simultaneously played messages dependent on the number of xCtrLine-44 & xCtrLine -2 cards in the system*
- *Intercom function between all microphones*
- *External audio inputs in all control units and zone microphones*
- *Up to 12 secured amplifiers fully supported*
- *Cost-efficient solution allows for up to 4 messages to be played simultaneously thanks to 4 common 100 V audio buses in each control unit*
- *DSP with implemented 3 band parametric EQ on all inputs on control units, 8 band parametric EQ , delay lines, audio limiter and feedback eliminator on each of the audio outputs*
- *Wide choice of bridgeable Class D amplifiers (8×80 W, 8×160 W, 4×160 W, 2×650 W, 1×650 W)*

ABT-DFMS
Firefighter's Microphone

Intelligent Voice Evacuation Investment

smartVES

EN 54-16 | EN 54-4 | EN 54-24

Add up to
254 devices in the network

+

- **660** speaker lines
- **45** global audio channels
- **180** simultaneously played messages

SITE 3

Rack with SMART-CU-11LT

ABT-DMS-LCD
Zone Microphone
with LCD

44

Up to 44 speaker lines

SITE 4

miniVES 4002LN

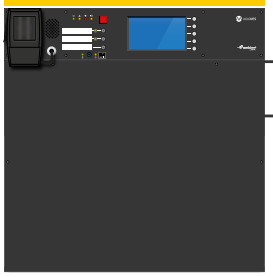

ABT-DMS
Zone Microphone

ABT-EKB-20M
Microphone
Keyboard Extension

8

8 speaker lines

ELEMENTS OF THE INTEGRATED SMARTVES SYSTEM

smartVES Devices	
SMART-CU-8LCD	Stand-alone control unit with 8 control slots and touch screen GUI
SMART-CU-11LT	Control unit with 11 control slots
SMART-CU-11LCD	Control unit with 11 control slots and touch screen GUI
SMART-PAXXXX/E	Power amplifiers
SMART-PSM48/E	Power supply manager
SMART-DU1604	Adaptive audio processor
SMART-AMAP-6	Adaptive microphone aggregation point
SMART-ANSM-01	Adaptive noise sensing microphone
SMART-xCtrLine-44	Speaker line control card

smartVES Exchangeable modules	
ABT-xNET-1Gb/WAN/RS	Communication card
ABT-xLogIN-8f	Logical input card for function slot
ABT-xLogIN-8c	Logical input card for control slot
ABT-xLogOUT-8f	Logical output card for function slot
ABT-xLogOUT-8c	Logical output card for control slot
ABT-xAudIO-4/8-RS	Audio card 4 IN / 8 OUT AUDIO / RS485
ABT-xCtrLine-2	2 Loudspeaker line control card

SMART-CU-8LCD

EN 54-16 | EN 54-4

1438-CPR-0948

CONTROL UNIT

SMART–CU-8LCD Control Unit (CU) is a matrix mixer of the input signals which routes signals to four 100V internal audio buses, a 45-channel digital system buses or directly to audio outputs in a unit.

Additional, it is equipped with the unique feature – dual (redundant) processor card (2x ABT-xCPU). SMART-CU-8LCD is prepared to serve the role of the main controller of the smartVES system and it has a master function with regard to the remaining devices.

CU is equipped with the slots on the rear panel for connecting four input modules, output audio modules or logic modules: ABTxAudIO-4/8-RS, ABTxAudIO-8, ABT-xLogIN-8f, ABT-xLogOUT-8f and up to 8 modules of loudspeaker line control or logical inputs / outputs:ABT-x CtrLine-2, ABTxLogIN-8c, ABT-xLogOUT-8c.

LCD colour and touch display gives a direct access to the managerial function and monitoring of the whole system. SMART-CU-8LCD is a matrix mixer of the input signals which routes such signals to four 100 V internal audio buses, a 48-channel digital system buses or directly to audio outputs in a unit.

CHARACTERISTICS

- ***EN 54-16 // 1438-CPR-0948 certified system***
- ***Fully network-based system allowing fornconfiguration, control and diagnostics via Ethernet***
- ***A possibility of managing up to 254 devices in the network***
- ***8 slots available for any configuration of loudspeaker control cards, control inputs and outputs cards***
- ***Additional 4 slots dedicated only for audio input/output cards and control input/output cards***
- ***Built in 2 control inputs and outputs***
- ***Up to 12 secured amplifiers supported***
- ***8 messages played simultaneously into different zones / 32 messages locally***
- ***2x1Gbit ports available for system extension***
- ***1x POE port Up to 32 GB SD flash memory dedicated for playback and recording messegas (48 kHz, 16 bit)***
- ***DSP implemented on each ABT-xAudIO-4/8-RS card with 3 band parametric EQ on 4 inputs, 8 band parametric EQ , delay lines, audio limiter and feedback eliminator on each of the audio outputs***
- ***SMS protocol allows smartVES system integration with other producers devices***

	SMART-CU-8LCD
Electrical	
Power supply	48 V DC (operating range 40-57 V DC) connector with screw terminals M2.5, the distance between the partitions of 5.08mm
Power consumption	Up to 60 W (depends on configuration)
Number of slots for function modules	4
Number of slots for control modules	8
Messages	Supported SD HC up to 32 GB The set included 512 MB SLC SDHC cards provide more than 20 minutes of messages
LCD display	4,5" LCD touch screen
DSP	Implemented 3 band parametric EQ on all inputs on control units, 16 band parametric EQ and Delay lines on each of the audio output
Data communication	Communication between devices over large distances: › 1000BASE-X on the fiber › 2 ports provide a redundant connection Communication between devices installed side by side: › 1000BASE-TX / RJ45 CAT5E cables after – 2 ports available on the back panel. › 100BASE-TX / RJ45 CAT5 cables after – 1 port available on the rear panel for connection to an external network (see notes) › 100BASE-TX / RJ45 CAT5 cables after – 1 port available on the front panel (the main processor card) for connection to an external network
Fiber module – connector type / kind of fiber	Modules type SFC / Connector SC / LC / Multimode or single-mode / E 30 or E 90, OM lub OM2
Communication with PC	PC software: RJ45 connector twisted pair connection TIA/EIA 568A by the Ethernet protocol
Environmental	
Operating temperature	-5°C / +40°C
Operating humidity	15% to 80% (non-condensing)
Storage temperature	-20°C / +70°C
Storage Humidity	15% to 80% (non-condensing)
Mechanical	
Finish Case Material	Finish Case Material: Steel The front panel is made of metal plate painted black
Dimensions	482 (W) × 85 (H) × 325 (D) mm
Mounting	19˝ – rackmount
Weight	Up to 8 kg (depends on configuration)
Accessories	
Accessories	2 brackets and 4 screws for rack, 8 caps for free slots

SMART-CU-11LCD / 11LT

EN 54-16 | EN 54-4

1438-CPR-0948

CONTROL UNITS

SMART-CU-11LCD

SMART-CU-11LT Control Unit (CU) is a matrix mixer of input signals which it routes to 4 100 V internal audio buses, a 45-channel digital system buses or directly to audio outputs in a unit. SMART-CU-11LT is designed to work for small PA & VE systems or as an extension unit in more complex systems. It means that the CU can function independently as the central unit of a small system or be part of a large complex system for which it represents another level of either territorial extension (operation in a remote structure) or functional extension (operation of further fire zones and loudspeaker lines in such a structure). The modular design of the CU and its flexibility enables optimisation of equipment and cost efficiency regardless of size / number of structures, their location and connectivity.

In the event of losing connectivity with a networked master unit, SMART-CU-11LT is able to perform fire alarm scenarios independently thanks to the configuration recorded locally. While attached to the main communication ring of the system, SMARTCU-11LT can control amplifiers and power supply managers as well as receive alarm and digital signals; and send them to other system devices. SMART-CU-11LT Control Unit distributes audio signals to individual zones and ensures that individual zones function properly. It also controls the condition of loudspeaker lines and amplifiers. If a fault is detected, it sends the signal to the system and automatically switches to a backup amplifier.

The CU is equipped with an SMART-cAudIO-4/12 card offering 4 symmetrical line audio inputs and 12 symmetrical outputs to lead audio signals out to external devices or amplifiers of the smartVES system. Furthermore, SMART-CU-11LT can be equipped with an LCD touch screen with a control module, which allows easy access to management functions and monitoring of the whole system – such extended configuration is included in SMART-CU-11LCD Control Unit.

CHARACTERISTICS

- ***Compliance with EN 54-16***
- ***Network-based system allowing configuration, diagnostics and management via Ethernet***
- ***Managing up to 254 devices on the network***
- ***11 slots available for any configuration of loudspeaker control cards and control input / output cards***
- ***Built-in audio card with 4 inputs and 12 audio outputs***
- ***Up to 12 messages played simultaneously in different zones***
- ***Up to 32 GB SD flash memory designated for playback and recording messages (48 kHz, 16 bit)***
- ***1 × POE port***
- ***Support of up to 12 secured amplifiers***
- ***Built-in 2 control inputs and outputs***
- ***2× 1 GB ports available for system extension***
- ***Integrated DSP with implemented 3 band parametric EQ on all inputs on control units, 8 band parametric EQ , delay lines, audio limiter and feedback eliminator on each of the audio outputs***

	SMART-CU-11LT	SMART-CU-11LCD
Electrical		
Power supply	48 V DC (operating range 40-57 V DC) connector with screw terminals M2.5, the distance between the partitions of 5.08mm	
Power consumption	Up to 100 W (depends on configuration)	
Number of control slots	11	
Number of function slots	0	
Messages	Supported SD HC up to 32 GB / The set included 512 MB SLC SDHC cards provide more than 20 minutes of messages	
LCD display	None	4.5" Resistive LCD touchscreen
DSP	Implemented 3 band parametric EQ on all 4 inputs of the control units 8 band parametric EQ, audio limiter and delay line on all of the audio outputs	
Number of audio inputs	4	
Type of audio inputs	Differential	
Connector type	1x RJ45	
Frequency response	40 Hz… 20 kHz (@1dB) / 400 Hz… 8 kHz (@0,1dB)	
Input impedance	≥ 10 kΩ	
Maximum input voltage	≥ 3 Vrms	
Number of outputs	12	
Type of outputs	Balanced	
Connector type	3x RJ45	
Frequency response	40 Hz… 20 kHz (@1dB) / 400 Hz… 8 kHz (@0,1dB)	
Harmonic distortion (THD+IMD)	≤ 0,05%	
Headroom	10 dB	
SNR	≥ 90 dB	
Channel separation	≥ 80 dB	
Output impedance	600 Ω	
Nominal output level	1 Vrms	
Data communication	Communication between devices over large distances: › 1000BASE-X on the fiber › 2 ports provide a redundant connection Communication between devices installed side by side › 1000BASE-TX / RJ45 CAT5E cables – 2 ports available on the back panel. › 100BASE-TX / RJ45 CAT5 cables – 1 port available on the rear panel for connection to an external network (see notes) › 100BASE-TX / RJ45 CAT5 cables – 1 port available on the front panel (the main processor card) for connection to an external network	
Fiber module – connector type / kind of fiber	Modules type SFP / Connector SC/LC / Multimode or single-mode / E 30 or E 90, OM lub OM2	
Communication with PC	PC software: RJ45 connector twisted pair connection TIA / EIA 568A by the Ethernet protocol	
Environmental		
Operating temperature	-5°C / +40°C	
Operating humidity	15% to 80% (non-condensing)	
Storage temperature	-20°C / +70°C	
Storage humidity	15% to 80% (non-condensing)	
Mechanical		
Finish case material	Finish Case Material: Steel / The front panel is made of metal plate painted black	
Dimensions	482 (W) × 85 (H) × 325 (D) mm	
Mounting	19˝ – rackmount	
Weight	Up to 8,4 kg (depends on configuration)	
Accessories	2 brackets and 4 screws for rack, 8 caps for free slots	

SMART-PAx / E Series

EN 54-16

POWER AMPLIFIERS

The Amplifiers are designed for perfect integration into the Ambient System solutions. Thanks to their flexibility, they can also be used for any other Public Address and Voice Evacuation applications. These amplifiers have been developed to meet the specific requirements of the EN 54-16 standard for safety installations.

The SMART-PAXXXX/E is a family of 2U, rack mountable, 8-channel (SMART-PA8080/E, SMART-PA8160/E), 4-channel (SMART-PA4160/E), 2 channel (high power SMART-PA2650/E) and 1 channel (SMART-PA1650/E) class-D transformer isolated power amplifiers for 50 V and 100 V distributed loudspeaker systems. Amplifier SMART-PA8080/E can deliver up to 8× 80 W, for SMART-PA8160/E and SMART-PA2650/E delivering power increases respectively to the 8× 160 W and 2× 650 W. In a bridged mode amplifier channels are combined and can deliver 4× 160 W for SMART-PA8080/E, 4×320 W for SMART-PA8160/E and 1× 1300 W for SMART-PA2650/E. These amplifiers have 48 VDC input which allows to connect with battery backup system for maximum availability and durability in an voice evacuation system. The SMART-PAXXXX/E amplifiers are powered from external power supply module SMART-PS48800 working in a block. The current from block is distributed to individual amplifiers through the "power manager" SMART-PSM48 (device includes a battery charger and is in compliance with EN 54-4). The SMART-PAXXXX/E amplifiers are prepared to connect an external audio source by using up to the eight BGM inputs (1 per channel) with the sensitivity level regulation. In the alarm mode the BGM inputs have to be muted by shorting the lines from BGM CTRL to the ground.

CHARACTERISTICS

- ***Front panel indicators include:***
  - ***Supply / Active / Fault***
- ***100 / 50 Volt available via terminal blocks at the rear***
- ***Output channels can be linked into:***
  - ***SMART-PA8080/E, SMART-PA4160/E, SMART-PA8160/E: 4× 160 W, 2× 320 W or 4× 320 W by daisy-chaining 50 V tapping (input on parallel)***
- ***SMART-PA2650/E: 1× 1300 W by daisy-chaining 50 V tapping (input on parallel)***
- ***SMART-PAXXXX/E series combines with the SMART-PSM48/E Power Supply Manager (charger and back-up supply)***
- ***At the rear of the SMART-PAXXXX/E you will find: Individual level adjusters / General fault contact (Dry contact) / BGM inputs***

SMART-PA8080/E / 8× 80 Watt class-D power amplifier
Can be bridge into: 1× 160 W + 6× 80 W; 2× 160 W + 4× 80 W; 3× 160 W + 2× 80 W or 4× 160 W

SMART-PA4160/E / 4× 160 Watt class-D power amplifier
Can be bridge into: 1× 320 W + 2× 160 W or 2× 320 W

SMART-PAXXXX/E casings: are 2U high, 19-inch rack mountable.

SMART-PA8160/E / 8× 160 Watt class-D power amplifier
Can be bridge into: 1× 320 W + 6× 160 W; 2× 320 W + 4× 160 W; 3× 320 W + 2× 160 W or 4×320 W

SMART-PA1650/E / 1× 650 Watt class-D power amplifier

SMART-PA2650/E / 2× 650 Watt class-D power amplifier
Can be bridge into: 1× 1300 W

	SMART-PA8080/E	SMART-PA4160/E	SMART-PA8160/E	SMART-PA1650/E	SMART-PA2650/E
Power supply					
Nominal DC input voltage			48 V		
DC input voltage range			42 – 57 V		
DC fuse rating (internal)	6× 7.5 AF-H	2× 15 AF- H 2× 7.5 AF-H	4× 15 AF-H 2× 7.5 AF-H	1× 15 AF- H 2× 7.5 AF-H	2× 15 AF- H 2× 7.5 AF-H
Overall power efficiency nominal DC input max. output power at 1 kHz			80%		
Power consumption (48 V DC)					
Standby	0.2 A	0.18 A	0.2 A	0.15 A	0.15 A
Active	0.7 A	0.43 A	0.7 A	0.23 A	0.33 A
Max. nominal current	20 A	19 A	38 A	19 A	38 A
Amplifier					
Continuous nominal output power per channel, all channels driven into nominal load at 1 kHz 30°C ambient	80 W 125 Ω / 100 nF	160 W 62 Ω / 200 nF	160 W 62 Ω / 200 nF	650 W 15.4 Ω / 200 nF	650 W 15.4 Ω / 200 nF
Nominal balanced input level for 100 V output at 1 kHz and nominal load			1 V		
Balanced input level trim range for 100 V output at 1 kHz and nominal load*			0.95 – 3 V		
Max. balanced input level			3 V		
Input impedance at 1 kHz			22 kΩ		
Input common mode rejection at <1 kHz			> 61 dB		
Frequency response (-6 dB)	75 Hz – 20 kHz 125 Ω / 100 nF	75 Hz – 20 kHz 62 Ω / 200 nF	75 Hz – 20 kHz 62 Ω / 200 nF	75 Hz – 22 kHz 15.4 Ω / 200 nF	75 Hz – 22 kHz 15.4 Ω / 200 nF
S/N ref nominal power at 1 kHz 22 Hz – 22 kHz	> 85 dB 125 Ω / 100 nF	> 85 dB 62 Ω / 200 nF	> 85 dB 62 Ω / 200 nF	> 85 dB 15.4 Ω / 200 nF	> 85 dB 15.4 Ω / 200 nF
THD power 1 kHz (42 V – 57 V)			< 10%		
Crosstalk between channel 50 Hz – 20 kHz nominal load	< -70 dB 125 Ω / 100 nF	< -70 dB 62 Ω / 200 nF	< -70 dB 62 Ω / 200 nF	< -70 dB 15.4 Ω / 200 nF	< -70 dB 15.4 Ω / 200 nF
Connectivity					
DC input socket			DG58C-A-2P13		
Audio output socket			3 pin PHOENIX 5.08 mm		
Nominal output voltage taps			50 / 100 V		
Mechanical					
Front panel width			482 mm		
Back panel width			445 mm		
Height			88.5 mm		
Net Weight	15 kg	13 kg	18.6 kg	10.8 kg	15 kg
Gross weight (including packaging)	16.2 kg	14.2 kg	19.8 kg	12 kg	16.2 kg
Packaging dimensions			150 × 530 × 610 mm		

** Available only for SMART-PA E series*

SMART-PSM48/E / PS48800 / PF4

POWER SUPPLY EQUIPMENT

SMART-PSM48/E Power Supply Manager is designed for distribution of DC Power Supply from Power Supply Units (PSU) and a back-up battery. The unit controls battery charging and distributes power supply to all Voice Evacuation System (VES) equipment at max. 60 A. When the system uses battery back-up, the power supplied is 3.2 kW (48 V). The unit complies with the EN 54-4 VES standards and also EN 12101-10 Smoke and Heat Control System standards. As a main source of energy distribution, the manager uses external modules 800 W (SMART-PS48800) for 48 V.SMART-PSM48E power supply manager uses internal power converter for 24 V equipment. As a source of standby power supply it uses the battery bank of the capacity of up to 200 Ah.

SMART-PSM48/E cooperates with the 4 × 12 V VRLA battery bank. It maintains the bank in charged condition, ensures temperature compensation of charging parameters and monitors serial resistance of the battery and its wiring as specified in Exhibit No.A2 to the EN 54-4 Standard. SMART-PSM48/E cooperates with up to 4 modules of SMART-PS48800 Power Supply Units. The manager ensures safe connection for the purpose of parallel operations and monitors the output parameters of each power supply unit.

SMART-PS48800 is designed for assembling in a dedicated SMART-PF4 Power Supply Unit Frame. The elements of the system are designed for assembling in a Rack 19" IP30-type.

EN 54-4

SMART-PS48800

SMART-PF4

	SMART-PSM48	SMART-PSM48E
Electrical		
Maximum configuration	1× SMART-PSM48 – Power Supply Manager 4× SMART-PS48800 – Power Supply Unit 1× SMART-PF4 – Power Supply Units Frame	1× SMART-PSM48E – Power Supply Manager 4× SMART-PS48800 – Power Supply Unit 1× SMART-PF4 – Power Supply Units Frame
AC power supply	230 VAC + 10%-15%; 50/60 Hz	
Max. nominal power consumption	885 W / 3.85 A	
Efficiency at rated power	> 90%	
DC input	4; bolted terminals; dedicated power supply unit SMART-PS48800	
DC input protection	4× 20 A 58 V DC	
DC outputs	8× 48 V, each output max. 30 A (total for all 8 outs max. 63 A)	8× 48 V, each output max. 30 A (total for all 8 outs max. 63 A) 6× 24 V, each output max. 5 A (total for all 6 outs max. 6,25 A)
Summary maximum DC output load (24 V and 52 V)	3200 W	
Battery (type)	4 pieces, VRLA 12 V 15 – 200 Ah	
Charging current	max. 14 A	
Charging voltage	54,6 V ± 0,6 V (at 25°C)	
Maximum resistance of wiring and fuses	10 mΩ	
Maximum total serial resistance of wiring, fuses, and batteries	28 – 100 mΩ	
Environmental		
Operating temperature	-5°C up +40°C	
Mechanical		
Dimensions	482 (W) × 85 (H) × 443 (D) mm	
Weight	7,2 kg	

	SMART-PS48800
Electrical	
AC power supply	230 VAC +10% -15%, 50/60Hz, 3.85 A Wire with IEC 60320 C13 3× 0,75 mm² coupling (supplied with the unit)
Maximum power consumption	885 W / 3.85 A
Efficiency at rated power	> 90%
AC input protection	T6.3 A/250 V 5× 20 mm slow-blow fuse (accessed when the casing is open)
Protection from electric shock	Class I (EN 60065)
DC output	52 VDC; max. 15.4 A
Mechanical	
Dimensions	85 (W) × 95 (H) × 395 (D)
Weight	2,6 kg
Accessories	
Power supply cord	IEC 60320 C13 1,5 m

SMART-DU1604

EN 54-16 | EN 54-4

1438-CPR-0948

ADAPTIVE AUDIO PROCESSOR

The SMART-DU1604 is a central processing unit, simultaneously processing up to 16 audio streams corresponding to 16 loudspeaker zones and up to 4 independent streams from system microphones.

Using digital audio processing tools, the SMART-DU1604 dynamically maximises the speech intelligibility parameter. This is done through a number of algorithms implemented in the unit. Among the main ones are the adaptive filtering algorithm and the temporal transposition of the speech signal. In addition, the SMART-DU-1604 is equipped with real-time algorithms responsible for calculating parameters such as: signal-to-noise ratio (SNR); speech comprehension index (STI); reverberation time (RT).

The SMART-DU1604 processes the audio signals picked up from the environment by the 16 SMART-ANSM-01 microphones and modifies the signals transmitted simultaneously to the 16 speaker zones in real time.

An additional element realised by the SMART-DU1604 unit is the auto-calibration, which makes it simple and quick to set up, with most settings selected in a fully automated manner.

CHARACTERISTICS

- ***Certified system EN 54-16:2011 No. 1438-CPR-0948***
- ***2 inputs and 2 logic outputs programmable on board***
- ***2x 1Gbit ports available for system expansion***
- ***1xPOE 1Gbit***
- ***2x SFP connectors for redundant fibre connection***
- ***High quality 48kHz audio processing 32bit resolution***
- ***Powerful processor processing 20 input streams, 20 audio output streams and 16 SMART microphones ANSM-01***

	SMART-DU1604
Electrical	
Power supply	48 V DC (operating range 40-57 V DC), connector with M2.5 screw terminals, distance between partitions 5.08 mm
Power consumption	Up to 17 W
Number of digital audio inputs	20
Sampling frequency	48kHz
Audio resolution	32 bit
Audio format	PCM
Number of digital audio outputs	20
Communication card	Long-distance communication between devices: › 1000BASE-X over fibre, › 2 ports to ensure redundant connection. Communication between devices installed next to each other: › 1000BASE-TX / RJ45 over CAT5E cables - 2 ports available on the rear panel of the device, › 100BASE-TX / RJ45 over CAT5 cables - 1 port available on the rear panel for connection to an external network, connection to configuration software.
Fibre optic module - type of connector / type of fibre optic cable	SFP type modules / SC/LC type connectors Multimode or single-mode fibre E 30 or E 90, OM or OM2
Communication with the PC	PC (commissioning software): RJ45 connector, twisted pair connections in TIA / EIA568A standard via Ethernet protocol
Mechanical parameters	
Finishing	Housing material: steel / Front panel made of metal plate painted black
Dimensions	482 (W) × 44 (H) × 325 (D) mm
Mounting	19'' rack-mounted teletechnical cabinet
Weight	4,3 kg
Accessories	2x power connector 1x connector for inputs, logic outputs
Storage and working environment	
Ambient temperature during operation	-5°C / +40°C
Ambient humidity during operation	15% to 80% (without condensation)
Storage temperature	-20°C / +70°C
Ambient humidity during storage	15% do 80% (without condensation)
IP degree of protection	20
Compatibility	
Device compatibility	SMART-ANSM-01, SMART-AMAP-6, SMARTVES, miniVES, midiVES

SMART-AMAP-6

ADAPTIVE MICROPHONE AGGREGATION POINT

- ✓ *Wide operating temperature range*
- ✓ *IP66-rated housing*
- ✓ *Powered by PoE or an external power supply*
- ✓ *Compatible with the smartVES device network*
- ✓ *Up to 6 controllers in a network*
- ✓ *Each controller supports up to 6 SMART-ANSM-01 microphones*

The SMART-AMAP-6 is a device whose purpose is to process signals from measurement microphones and transmit them in digital form to the SMART-DU-1604 units.The SMART-AMAP-6 interface allows up to 6 monitored measurement microphones to be connected. The measured parameters of the background noise and system loudspeakers are used by adaptive filtering algorithms in the assigned zones. The SMART-AMAP-6 is a networked device and can be powered via the POE of the system switch or central unit, as well as from an external 34-58VDC power supply.

Dedicated low-noise microphone amplifiers compatible with the SMART-ANSM-01 available in the SMART-AMAP-6 enable correct operation of measurement microphones at distances of up to 400 metres.

	SMART-AMAP-6
Electrical	
Power source	PoE (RJ45), or via 2-pin connector
Number of audio inputs	6 differential channels
Power consumption (typical/maximum)	4.5 W / 7 W
Supply voltage range	34V - 58VDC
Sampling frequency	48 kHz
Measuring bandwidth	200 Hz - 9 kHz @3 dB
Differential input impedance	4000 Ω @1kHz
Range of measured values (for corresponding input voltages)	56 dBSPL (1.5mVRMS) - 120 dBSPL (3VRMS)
Phantom power supply	30 VDC
Mechanical parameters	
Dimensions	200 x 125 x 90 mm
Weight	1.2 kg
Colour	white
Housing material	Aluminium
Connectors	› 6x 3-pin connector type 15EDGVC-3.5 › 1x RJ45 › 1x Phoenix MSTBVA 2-pin screw - 5.08 mm raster
Storage and working environment	
Operating temperature range	-5°C to + 50°C
Ambient humidity	5% to 95% non-condensing
IP degree of protection	54 // 66 - with additional gland sealing
Compatibility	
Device compatibility	SMART-ANSM-01, SMART-DU1604, miniVES, midiVES
Used cables	
LAN cable types used	Category 5e F/UTP twisted pair, up to 100 m between control unit / switch and SMART-AMAP-6
SMART-ANSM-01 microphone inputs	2-core microphone cable 2x0.22mm2 with spiral copper shield, max. conductor resistance: 86 Ohm/ km - connection up to 300 metres or 3x16AWG, unshielded up to 400 metres

SMART-ANSM-01

ADAPTIVE NOISE SENSING MICROPHONE

- ✓ *Wide range of measurement dynamics*
- ✓ *Discreet and elegant design*
- ✓ *Compact size*
- ✓ *Cable length of 3 meters included*
- ✓ *High resistance to weather conditions*

The measurement microphones are an integral part of the smartVES system. Their purpose is to test the level and frequency characteristics of sound at an object in the range of 100Hz-10kHz (+/- 2dB) with sound levels from 50dB to 120 dB SPL. The microphone's specially designed electronics ensure stable measurement performance with long connection cables of up to 300 metres. In addition, the dedicated housing provides easy installation and an aesthetically pleasing and unobtrusive appearance giving the microphone the ability to be used in many facilities where a small housing with multiple application possibilities is expected for functionality reasons.

OUTDOOR ENCLOSURE

CEILING-MOUNTED HOUSING

	SMART-ANSM-01
Frequency response	100Hz - 10kHz (+/- 3dB)
Ambient noise measurement range	50 – 120 dB SPL
Output dynamic range	0,7 (50dB) – 3650mV (123 dB)
Directional characteristic	omnidirectional
Power supply	32VDC / 5mA
Signal-to-noise ratio (S/N)	60dB
Output	analogue, balanced
Dimensions	Ø 34.0 × 130.0 mm
Weight	187 grams
Colour	black
Housing material	PA66 GF UL94 V0 / Halogen-free
Connector	3-pin screw connector
Cable	3 metres 2x0.22mm2 PVC with screen
Temperature	-40 °C to +55 °C
Ambient humidity	5% to 95% non-condensing
Degree of protection of the enclosure	IP65
Compatibility	SMART-AMAP-6

Microphones

EN 54-16

ABT-DFMS
FIREFIGHTER MICROPHONE

A smartVES fireman microphone is a monitored external device working with Control Units in a redundant communication ring. It can thereby perform a superior function of a system control unit, too. A fireman microphone can be used to activate alarm messages as well as general public announcements, to choose individual zones and to broadcast live voice messages. It is equipped with programmable function keys which can be used to assign functions as required. Up to 5 ABT-EKB-20M keyboard extensions with additional function keys can be attached to a fireman microphone.
A CPU switch enables immediate and direct broadcasting of announcements to all zones without any involvement of the control system even during a failure of the central processor. The microphone is able to automatically detect a key failure and an audio path from the microphone capsule (inclusive) to the Control Unit.
A fireman microphone is also equipped with an intercom function and is able to communicate with other microphones in the system.

CHARACTERISTICS

- ***Monitored microphone and connection of the microphone module to the system***
- ***A dedicated evacuation key***
- ***3 fully-programmable keys with a possibility of connecting up to five 20-key extensions***
- ***Built-in 2 contact inputs and 2 relay outputs***
- ***POE or external feeder based power supply***
- ***Black-box function – recording all announcements played during an alarm***
- ***Built-in SFP modules and CAT5e for simplicity of implementation of the loop topology***
- ***RS485 for communication with external systems***
- ***Intercom function between all fireman and zone microphones***

ABT-DMS-LCD
ZONE MICROPHONE WITH LCD

This microphone performs the same role as an ABT-DMS zone microphone. In order to facilitate its operation and to make it more intuitive, the microphone is equipped with an LCD touch screen.

CHARACTERISTICS

- ***4.5" LCD touch screen for fast and clear matricing and system management***
- ***Ability to select zones and messages to be played (pre-recorded or 'live') and other audio input***
- ***Monitored connection of the unit to the system***
- ***5 fully-programmable keys with a possibility of connecting up to five 20-key extensions***
- ***4 non-symmetrical audio inputs, (1/8") stereo jack connector***
- ***Built-in speaker***
- ***Stereo jack sockets for a headset***
- ***Implemented intercom function***
- ***Power supply via POE***

ABT-EKB-20M
MICROPHONE KEYBOARD EXTENSION

Each extension attached to a fireman microphone or a zone microphone offers additional 20 function keys which can be programmed as required.

ABT-DMS
ZONE MICROPHONE

This zone microphone is used to activate general public announcements, to choose individual zones and to broadcast live voice messages. It can be connected directly to a selected Control Unit or via an additional Ethernet switch. A zone microphone can be powered locally (48 V) or from a Control Unit via POE.
It is equipped with programmable function keys which can be used to assign functions as required. All operational parameters can be programmed e.g. assignment of zones to various keys, naming of zones and zone groups, determining priorities, setting up access rights to announcements, volume controls, 'push to talk' key, music on/off and music routing. Furthermore, LEDs on the ABT-DMS provide information about existing fault on the system, any faults in a specific speaker zone, evacuation mode on and type of announcement in the zone (BGM, PA, EVAC, Warning, fireman microphone).
Up to 5 ABT-EKB-20M keyboard extensions with additional function keys can be attached to a zone microphone. Similarly to a fireman microphone, it is also equipped with an intercom function and is able to communicate with other microphones in the system.

CHARACTERISTICS

- ***Monitored connection of the unit to the system***
- ***9 fully-programmable keys with a possibility of connecting up to five 20-key extensions***
- ***4 non-symmetrical audio inputs, (1/8") stereo jack connector***
- ***Built-in speaker***
- ***Stereo jack sockets for a headset***
- ***Implemented intercom function***
- ***Power supply via POE***

ABT-M04N

MICROPHONE STATION

- ✓ *Daisy chain connection up to 6 mics*
- ✓ *Simple Cat5e interconnection*
- ✓ *AUX input with dedicated volume control*
- ✓ *Microphone gooseneck with LED red ring indication*

The ABT-M04N is a 4 button analog microphone with built in AUX input, push to talk key and LED indicating the ready-to-speak status with AUX active status. Microphone can be daisy chained with up to 6 microphones. Number of connected microphones depends on the total length of the Cat5e cable and supply voltage.

To operate the device first select the Zones by pressing designated buttons and then press MIC button. The Mic LED will start blinking green for the time of matrix activation. When Mic led is green and red ring on the goose neck lights up, microphone is ready for live announcement. On the other microphones connected in the chain, AUX LED and MIC LED are blinking indicating that live announcement is being broadcast on other microphone. When finished transmitting the message release the MIC button to deactivate the gooseneck mic.

Only one microphone can have aux input active. To use it please connect device to 3,5mm jack socket market as AUX, select the zones to which AUX signal will be transfer and select AUX button to create connection. Green led on Aux indicates that microphone has active aux input, on the other microphones in the chain AUX LED is blinking green. Microphone always has the higher priority over the AUX. When aux is activated on selected zones on one microphone it is possible to select different zones for live broadcast on other microphones. Deactivation of the MIC will activate previously selected zones with AUX.

CHARACTERISTICS

- » ***Active MIC / AUX in use information between microphones***
- » ***Wide range of operating voltages***
- » ***Long connection distances: up to 700 metres for 1x M04N powered by 48VDC, up to 390 metres for 1x M04N powered by 24VDC, up to 320 metres for 6 x M04N***

SMART-xCtrLINE-44

SPEAKER LINE CONTROL CARD

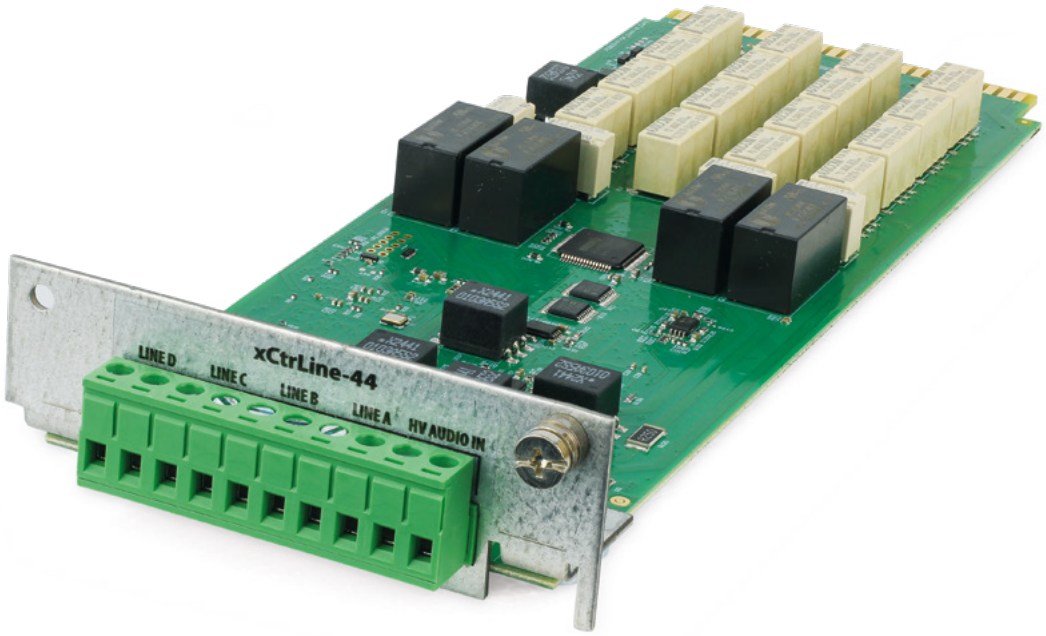

The smartVES system uses the new SMART-xCtrLine-44 loudspeaker line control cards, which allow full freedom of routing independent voice messages from the system BUS audio buses, to each of the 4 outputs of the card. The SMART-xCtrLine-44 allows the connection and any configuration (AB / loop / individual zone) of up to 4 loudspeaker circuits and the simultaneous emission of different audio content to each of them. Improved compared to previous versions of the control cards, the measurement of loudspeaker line impedance has been extended to a range from 1kHz to 20kHz which enables precise measurement of the load on the loudspeaker lines. In addition, line measurement can be performed using three methods: impedance, loop with short-circuit isolators as well as with EOL end-of-line modules.

	SMART-XCTRLINE-44
Power supply	Internal form the Control Unit backplane
Maximum current consumption	152 mA for 48 V
Type of connector	10 pin screw terminal type PHOENIX, 5.08 mm
Impedance measurement frequency	1 kHz to 48 kHz
Frequency of the signal for EOL modules	18 kHz to 24 kHz
Maximum measured current	2 A
Maximum measured voltage	200 V
Accuracy of measurement	Up to 5%
Operating temperature	-5°C to 40°C
Operating humidity	15% to 80%
Storage temperature	-20°C to 70°C (non-condensing)
Storage humidity	5% to 95% (non-condensing)
Dimensions	70 × 215 × 30 (mm)
Accessories	Screw terminals 10 pins, the distance between the partitions 5.08 mm

Exchangeable Modules

EN 54-16

ABT-xCPU
CPU CARD

The card integrates SMART-CU8 and SMART-CU8LCD Control Units with other elements of the smartVES system. CPU controls the whole network traffic and manages audio routing, digital matrix (8×8) as well as all DSP functions. ABT-xCPU enables remote access to the configuration parameters of each element of the system.

ABT-xAudIO-4/8-RS
4 AUDIO INPUT / 8 AUDIO OUTPUT CARD

This audio input/output card is designed for a function slot of ABT-CU-8/LCD Control Unit. It offers 4 line audio inputs (via an RJ45 connector) and 8 symmetrical outputs to lead audio signals out via RJ45 connectors to external devices or amplifiers of the smartVES system. The card is also equipped with an RS485 interface through which the smartVES system can be controlled or integrated with devices offered by other producers.

ABT-xNET-1Gb/WAN/RS
COMUNICATION CARD

ABT-xNET is a communication card, which offers two independent 1 GB network switches; switch no 1 is designed solely for data transmission in connection with the base functionality of the smartVES system i.e. operations of the emergency sound system and AVB whereas switch no 2 is used for remote connections. This card operates under TCP / UDP / PTP / DHCP protocols and assures CPU-OFF based audio data exchange by means of a protocol developed by Ambient System. Furthermore, the card has an RS485 port enabling seamless integration of the smartVES system with any other systems (e.g. FAS) by means of exchangeable libraries with protocol descriptions. The card also includes POE splitter functionality to provide power to fireman microphones among others.

ABT-xCtrLine-2
2 LOUDSPEAKER LINE CONTROL CARD

This card is designed for a control slot in every Control Unit; it offers 2 independent loudspeaker line outlets (A and B). Lines can be measured either by the impedance or loop methods. The card detects failure of the amplifier and switches the 100 V signal between internal buses and individual amplifier input on the card.

ABT-xLogOUT-8f / ABT-xLogOUT-8c
LOGICAL OUTPUT CARD FOR FUNCTION / CONTROL SLOTS

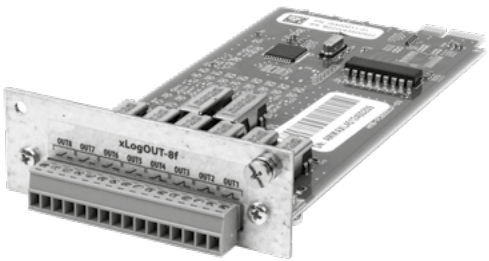

The logical output card has 8 relays i.e. 4 × normally-closed (NC) and 4× normally-open (NO). All of them are fully programmable in terms of NC / NO functioning as well as function correlation.

ABT-xLogIN-8f / ABT-xLogIN-8c
LOGICAL INPUT CARD FOR FUNCTION / CONTROL SLOTS

The logical input card has 8 independently-programmable control inputs which may receive signals from other systems in order to trigger a desired reaction of the smartVES system. Inputs of an ABT-xLogIN-8f card offer two modes of work i.e. a non-potential mode (short-circuited / open-circuited) and a voltage mode where the card enables monitoring of short-circuiting and open-circuiting of cables connected to inputs.

ABT-ISLE AUDIO INTERFACE / RS485

The ABT-ISLE is both a communication module enabling integration with external systems via RS485 protocol, and an audio signal splitter.

Address settings – Number of addresses in the range of 0-F (16 addresses).

Local AUDIOIN – 4 input channels on the 8 pin connector. For easier and faster connection of audio sources, Phoenix-type connectors can be used. LOCAL AUDIO IN jack (8 pin connector Phoenix) is bridged with LOCAL AUDIO OUT (RJ-45).

Output amplifiers – RJ-45 connector for the 4-channel amplifier. // Local AUDIOOUT – RJ-45 connector for input signals to the system // PSM – RJ-45 connector for the link with power manager.

smartVES System Configuration

software / system examples

SMARTVES SELECTOR

SmartVES SELECTOR is an essential tool for the smartVES system configuration via PC (Windows). SV SELECTOR allows to select and match Public Address & Voice Evacuation smartVES Systems with a large number of similar or different devices to be configured and managed centrally from a single user interface.

SmartVES SELECTOR supports all IP-based smartVES devices offering control and configuration of control units (SMART-CU-8LCD, SMART-CU-11LT, SMART-CU-11LCD) and microphones (ABT-DFMS Fireman Microphone, ABT-DMS-LCD Zone Microphone with LCD, ABT-DMS Zone Microphone).

EXAMPLE 1 / HOTEL

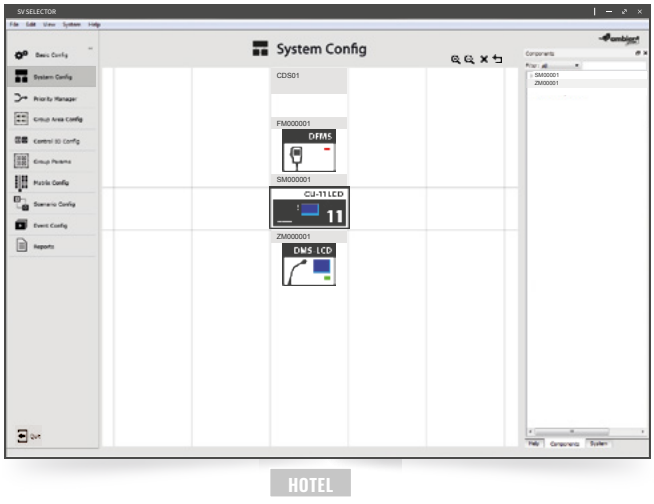

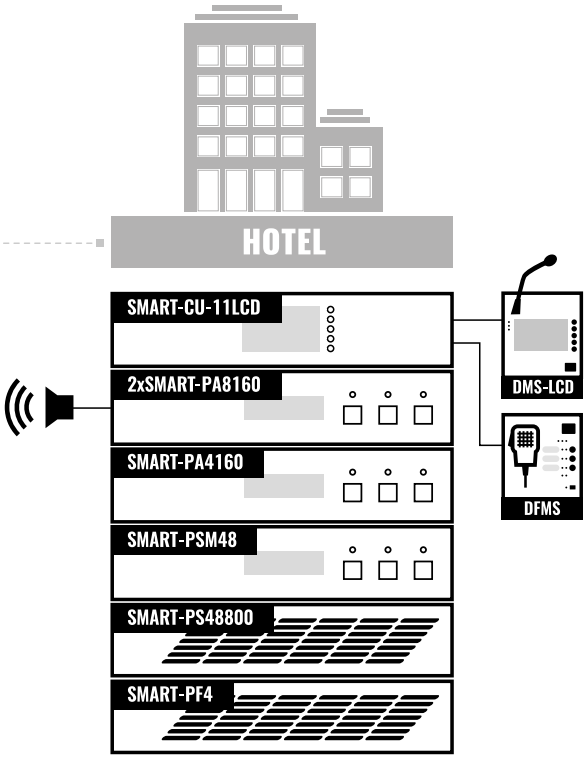

Example of a small smartVES system configuration:

- *1 building / Hotel*
- *32× loudspeaker lines (16 AB)*
- *8× audio channels*

with dedicated devices:

- *SMART-CU-11LCD (8× ABT-xCtrLine-44)*
- *2× 4 channels 320 W (2× SMART-PA8160 amplifier)*
- *1× 2 channels 320 W (1× SMART-PA4160 backup amplifier)*
- *Power Supply Equipment*
- *1× ABT-DFMS fireman microphone*
- *1× ABT-DMS-LCD zone microphone with LCD*

EXAMPLE 2 / OIL REFINERY

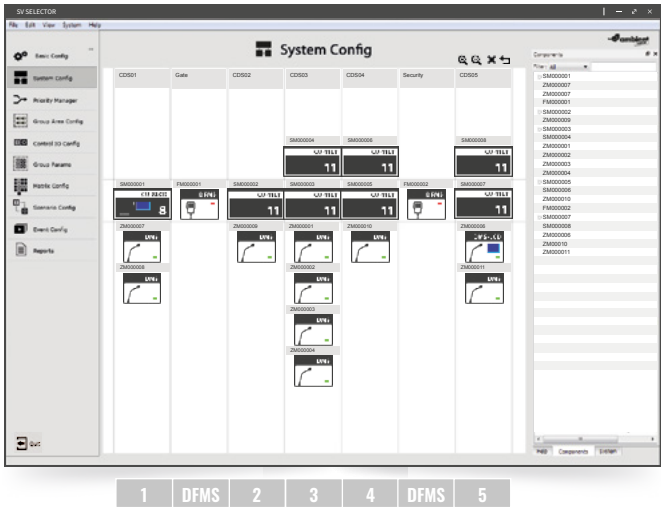

Example of a large smartVES system configuration:

- *5 buildings (Oil Refinery)*
- *292× loudspeaker lines (146 AB)*
- *28× audio channels*

with dedicated devices:

- *1× SMART-CU-8LCD Control Unit (8× ABT-xCtrLine-44)*
- *7× SMART-CU-11LT Control Unit (8× ABT-xCtrLine-44)*
- *5× 4 channels 320 W (5× SMART-PA8160 amplifiers)*
- *4× 2 channels 320 W (4× SMART-PA4160 backup amplifiers)*
- *Power Supply Equipment*
- *2× ABT-DFMS fireman microphone*
- *1× ABT-DMS-LCD zone microphone with LCD*
- *9× ABT-DMS zone microphone*

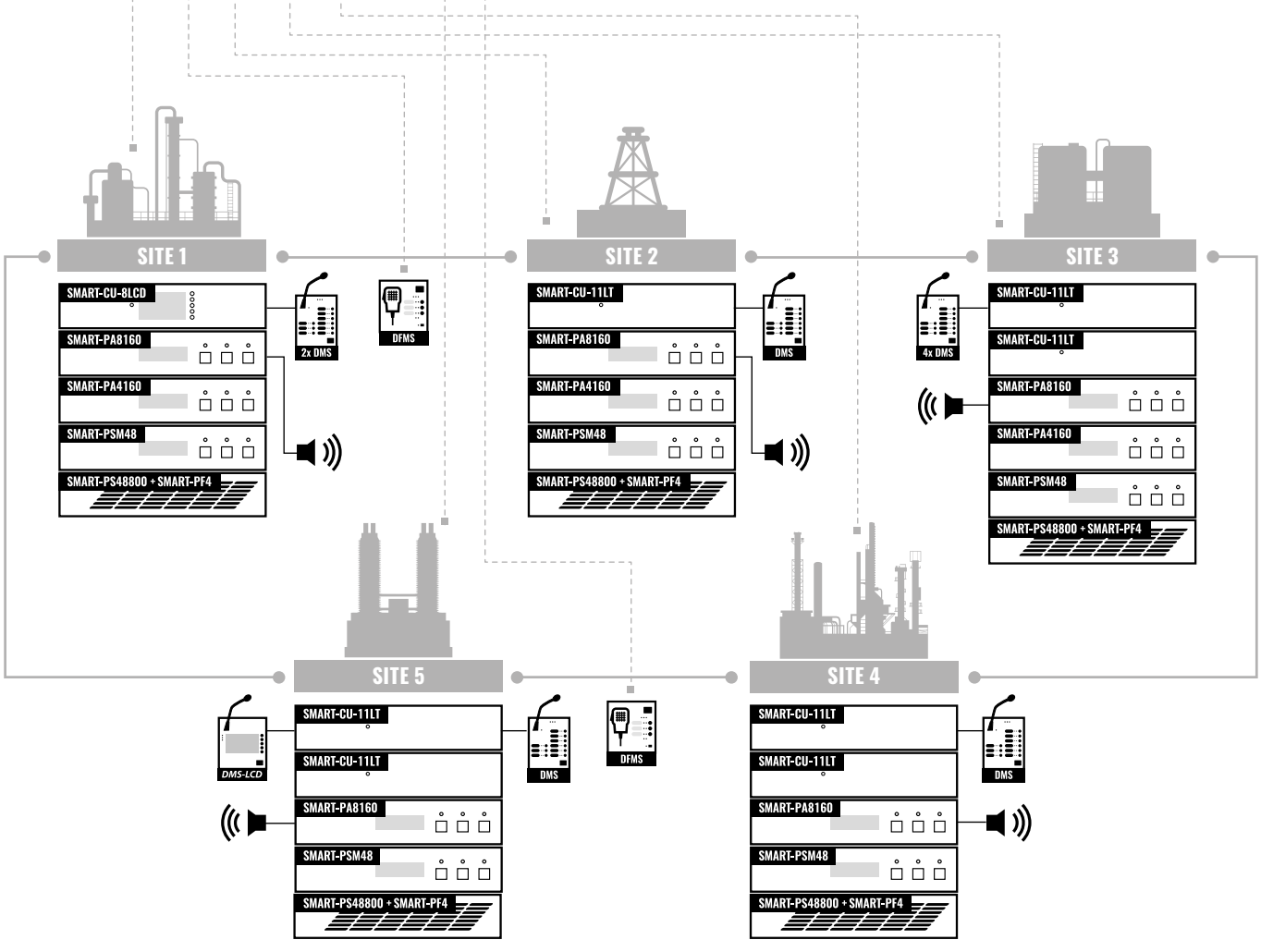

Main Menu
Fire Zones
Fault register
Service
Interface settings

miniVES midiVES

EN 54-16 | EN 54-4

1438-CPR-0527

Compact plug-and-play PA/VA system

General information

MAIN FEATURES 37
SYSTEM EXAMPLE 38

System Comparison

MINIVES 39
MIDIVES 40

Examples of Implementations

STORE / PA SYSTEM 41
TRAIN / TUBE / BUS STATIONS – VOICE EVACUATION SYSTEM 42

Compact Plug-and-Play PA/VA System

EN 54-16 **EN 54-4**

MINIVES / MIDIVES MAIN FEATURES

- *All in one – independent wall mount EN 54-4 /16 PA/VA unit*
- *Stand alone or TCP/IP network architecture*
- *DSP audio processing on board*
- *Compatibility with RACK mounted modular smartVES*
- *Professional Sound Quality (48 kHz, 16 bit, uncompressed audio)*
- *Evacuation, paging message and background music features*
- *Impedance, end of line module or short-circuit isolators for speaker line monitoring*
- *Simple installation and simple to design*
- *User friendly and intuitive programming software*
- *VoIP / SIP integration*
- *EN 54-4 charger for up to 65 Ah batteries and 24 / 48 VDC outputs for powering external devices*

MINIVES / MIDIVES SYSTEM EXAMPLE

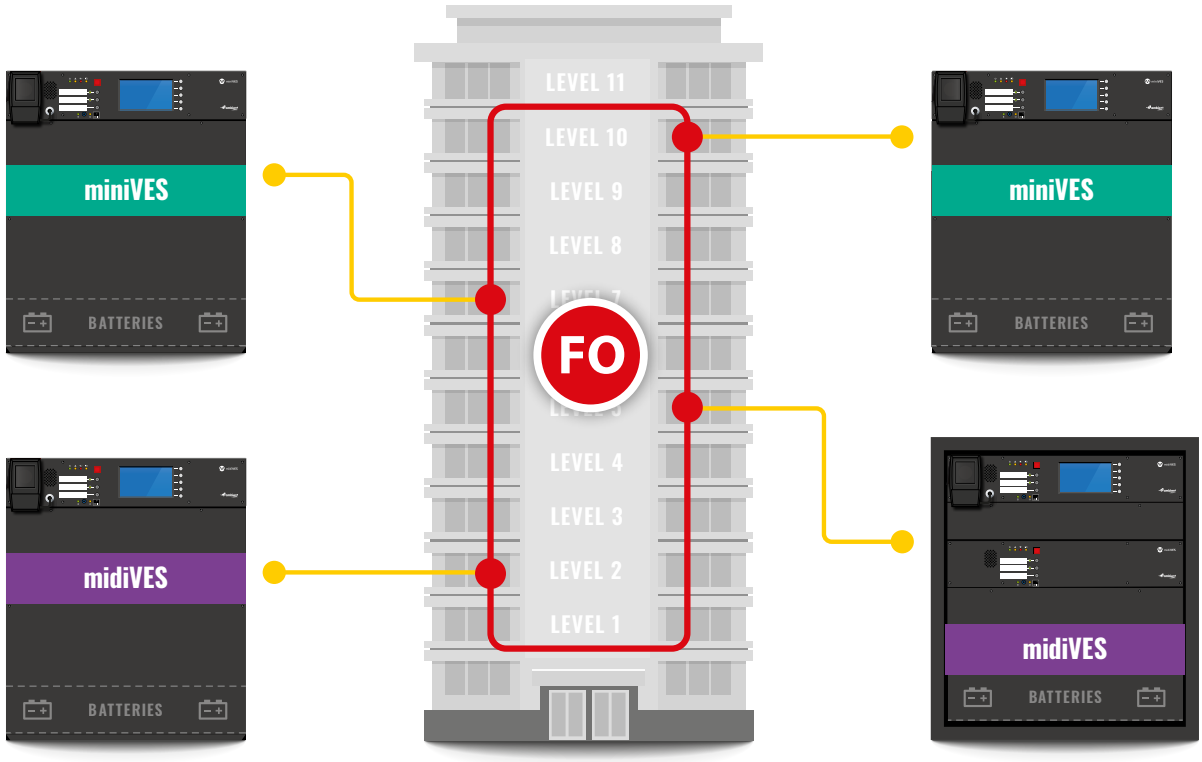

miniVES and midiVES are scalable Public Address & Voice Alarm units suitable for multi-purpose architectures. Devices from miniVES and midiVES series are voice alarm compact control units containing all components within one compact housing, which meet all the requirements of EN 54-16 and EN 54-4 (certificate of constancy of performance 1438-CPR-0527).

Whole concept of the system is based on the high quality audio network distribution nodes equipped either with two independent 160 W, 320 W or three independent transformerless 500 W class D amplifiers, which distribute 100 V signals to 4, 8 or 16 speaker lines depending on the type. The system also ensures operation of a backup amplifier for the Emergency priority type of signals.

All type of centrals are equipped with integrated backup power supply and EN 54-4 compliant charging unit.

miniVES and midiVES are designed to be a Plug & Play device with all elements expected from Voice Evacuation Systems; including a built-in fire microphone, touchscreen for global control, DSP, programmable contact inputs and buttons, time scheduler, charger with battery mounting space and expandable memory size for messages – all fitted into IP30 chassis or dedicated 15u rack for midiVES 8003LNR with 8003R.

miniVES and midiVES belongs to the family of independent EVAC systems which can be networked together and extended by desktop zone microphones or fireman microphones via TCP/IP network to provide live announcements and background music inputs. The system has been designed to be wired using CAT5 cables for paging microphones and fibre-optic redundant interlink connections between the systems.

All systems support up to 45 high quality audio signals distributed over 254 devices in the network.

miniVES	2001L/LN *	4001L/LN *	4002L/LN *	8002L/LN *	4002LNR *	8002R/LNR
No of AB zones	2	4	4	8	4	8
No of speaker lines	4	8	8	16	8	16
No of control inputs	7					
No of relay outputs	3					
Relay switching current (max.)	3 A peak **					
Relay switching voltage (max.)	50 V AC / DC peak **					
Relay switching power (max.)	90 W **					
Total audio load of the system	320 W rms	640 W rms				
No of amplifiers / power	2 / 160 W	2 / 320 W				
Redundant amplifier	Yes					
No of messages played at the same time	1		2			
Protection	Over-temperature, short circuit, overload, ground leakage					
Battery working time	30 hours + 30 minutes evacuation					
Ingress protection	IP 30					
Operating condition	-5 to + 45°C / 5% to 95% humidity with no condensation					
Gross weight	26 kg	31 kg	31,5 kg		19 kg	
Dimensions (W×H×D)	440 mm × 525 mm × 350 mm				439 mm × 176 mm × 354 mm	
Finish	czarny					
Optional functions						
No of audio inputs	1 – Stereo to mono					
No of audio outputs	1 – mono line output					
Network card (all versions LN and LNR)	2× SFP module 1 Gb/s; 1 × POE 1 Gb/s, 100 Mb/s; 1 × LAN 1 Gb/s, 100 Mb/s connection; RS485 port; 1x LAN/WAN 100 Mb/s connection					
Basic network card (versions L and R only)	2× LAN 1 Gb/s, 100 Mb/s, 1× LAN / WAN 100 Mb/s					
GUI	4,3'' color touch screen					
DSP	Input EQ, outputs EQ, feedback eliminator and audio limiter, delay up to 30000 ms w – routing, mixing, prioritizing included					

** All devices available with optional touch screen LCD (L) and network card with 2 × SFP modules and POE (N)*
*** IMPORTANT: any DC combination of V & A not to exceed switching power max. value. Not allowed capacitive nor inductive load, because of large inrush current / voltage spike, that can significantly exceed the maximum allowed switching current or voltage.*

midiVES	8003LN	8003LNR	8003R	8003LNR + 8003R
No of AB zones	8			16
No of speaker lines	16			32
No of control inputs	7 + 2		7	14 + 2
No of relay outputs	3 + 2		3	6 + 2
Relay switching current (max.)	3 A peak*			
Relay switching voltage (max.)	50 V AC / DC peak*			
Relay switching power (max.)	90 W*			
Total audio load of the system	1500 W rms			3000 W rms
No of amplifiers / power	3 / 500 W			6 / 500 W
Redundant amplifier	Yes			Yes
No of messages played at the same time	3			6
Protection	Over-temperature, short circuit, overload, ground leakage			
Battery working time	30 hours + 30 minutes evacuation / 4 × 12 V VRLA batteries			
Ingress protection	IP30	Mounted in IP30 Rack		
Operating condition	-5 to + 45°C / 5% to 95% humidity with no condensation			
Weight	23 kg	16,5 kg	16 kg	N / A
Dimensions (W × H × D)	440 × 525 × 350 mm	440 × 176 × 354 mm		600 × 765 × 600 mm
Finish	Black			
Optional functions				
No of audio inputs	1 – stereo to mono			2 – stereo to mono
Power sources – EN 54-4	1 × 24 V DC (150 mA maximum) and 1 × 48 V DC (350 mA maximum)			2 × 24 VDC (150 mA max.) & 2 × 48 VDC (350 mA max.)
Optional network card	2 × SFP module 1 Gb/s; 1 × POE 1 Gb/s, 100 Mb/s; 1 × LAN 1 Gb/s, 100 Mb/s connection; RS485 port; 1 × WAN 100 Mb/s connection		2 × LAN 1 Gb/s, 100 Mb/s, 1 × WAN 100 Mb/s connection	2 × SFP module 1 Gb/s; 1 × POE 1 Gb/s, 100 Mb/s; 3 × LAN 1 Gb/s, 100 Mb/s connection; RS485 port; 2 × WAN 100 Mb/s connection
GUI 4,3" color touch screen	Yes	Yes	No	Yes
DSP	Input EQ, outputs EQ, feedback eliminator and audio limiter, delay up to 30000 ms – routing, mixing, prioritizing included			
Fire microphone	Yes	Yes	No	Yes

** IMPORTANT: any DC combination of V & A not to exceed switching power max. value. Not allowed capacitive nor inductive load, because of large inrush current / voltage spike, that can significantly exceed the maximum allowed switching current or voltage.*

Examples of Implementations

STORE / PA SYSTEM

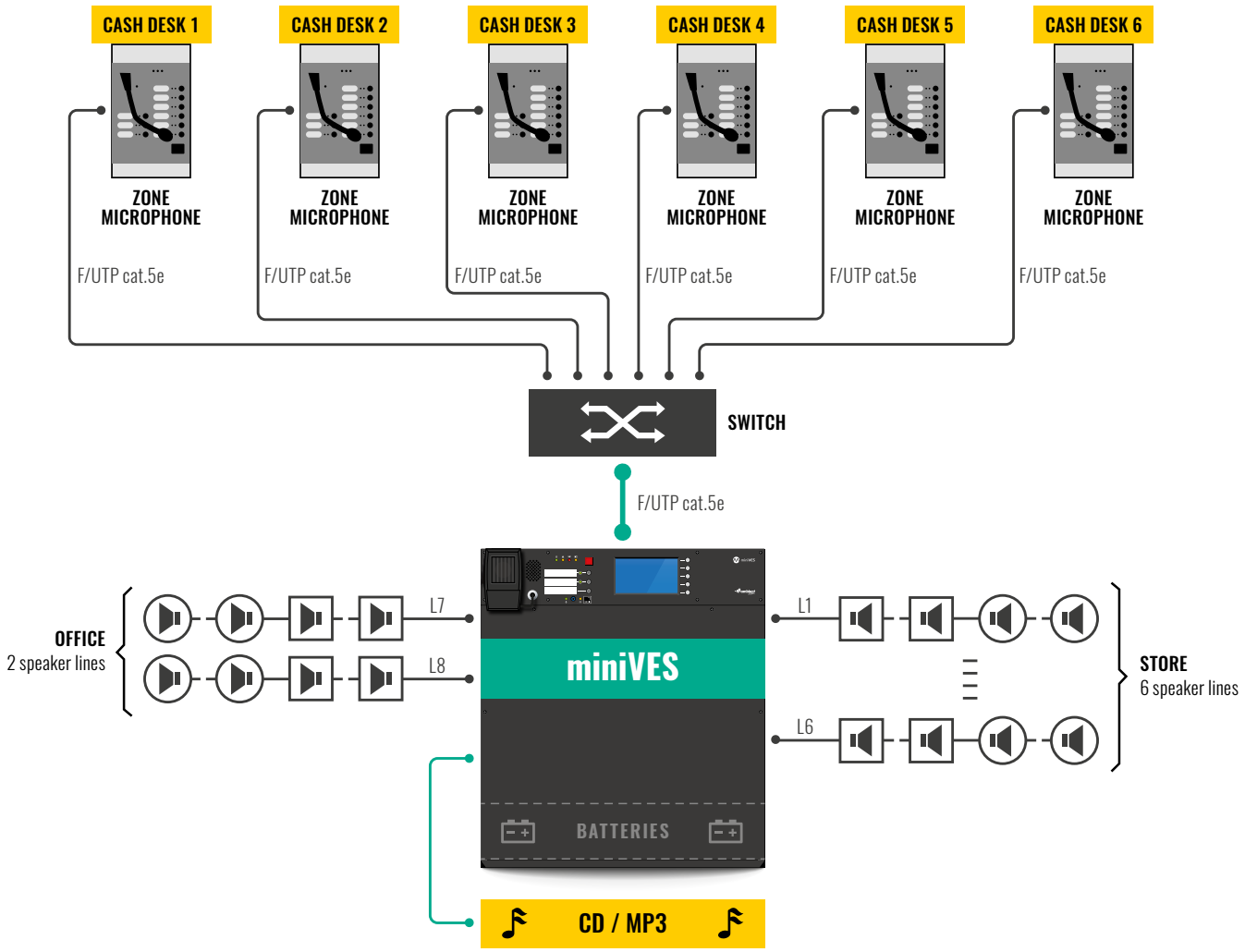

PA SYSTEM WITHIN THE STORE

Zone microphone at the till:
Public announcements;
Fully programmable buttons can be easily activated to broadcast specific announcements e.g. previously recorded public information regarding opening of tills or staff announcements.

Zone microphone in the office:
It acts as the PA control panel allowing to select zones, switch on/off specific sound sources and regulate the sound volume;
Ethernet protocols enable seamless communication between zone/fireman microphones and the control units via standard switches connecting mic cables to miniVES control unit;
In-built audio setup can be used to connect external sound sources to broadcast marketing announcements or to provide background music in the venue.

TRAIN / TUBE / BUS STATIONS – VOICE EVACUATION SYSTEM

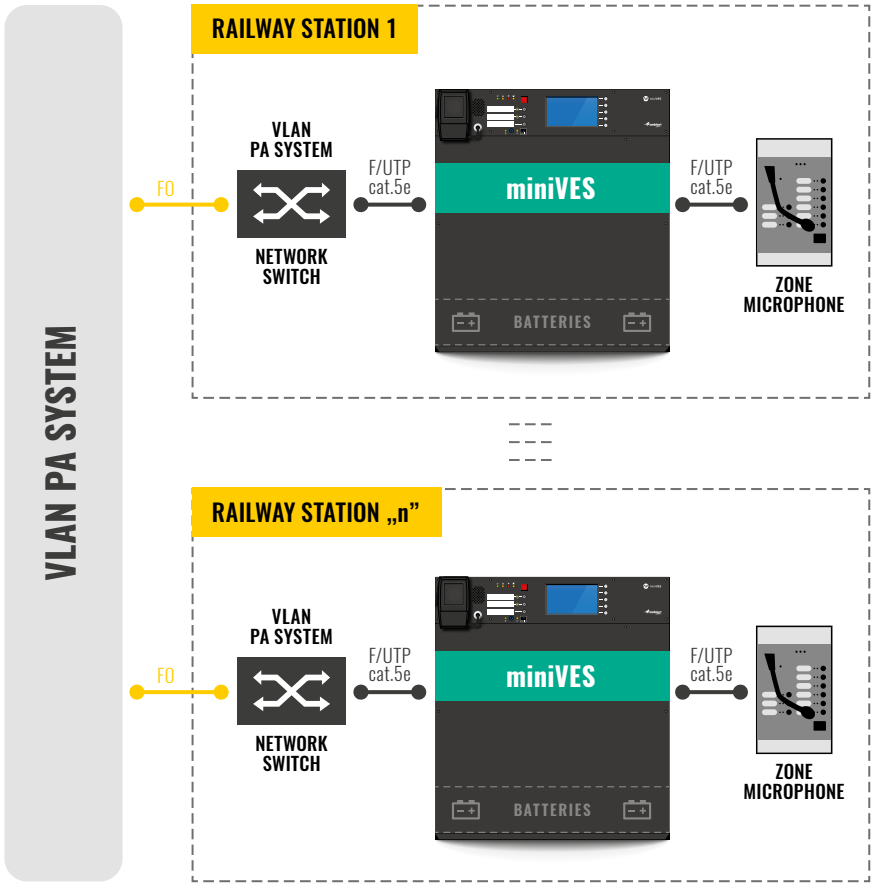

miniVES control unit's network cards allow to join several stations into one integrated system via Ethernet and VLAN protocols. Zone microphones located at each station enable broadcasting of live announcements and/or pre-recorded automatic messages to selected zone(s) at the station as well as to all zones in the whole system. Information can be broadcasted by staff to all or selected platforms to advise passengers of changes in the timetable or to warn them of an emergency.

In-built audio inputs in each central unit and microphones allow to connect external sound sources and to transmit information controlled by the external authority.

In-built buffering function enables recording of lower priority information to be transmitted once the priority zones are freed up.

EXPANSION OF EXISTING MINIVES SYSTEM – CONNECTION WITH SMARTVES

Connecting miniVES and midiVES system to smartVES system, designed to work with medium and large structures, can provide full networking capabilities. A networked solution of smartVES, midiVES and miniVES can be then installed at large train stations, airports and other complex structures while providing tangible cost efficiencies.

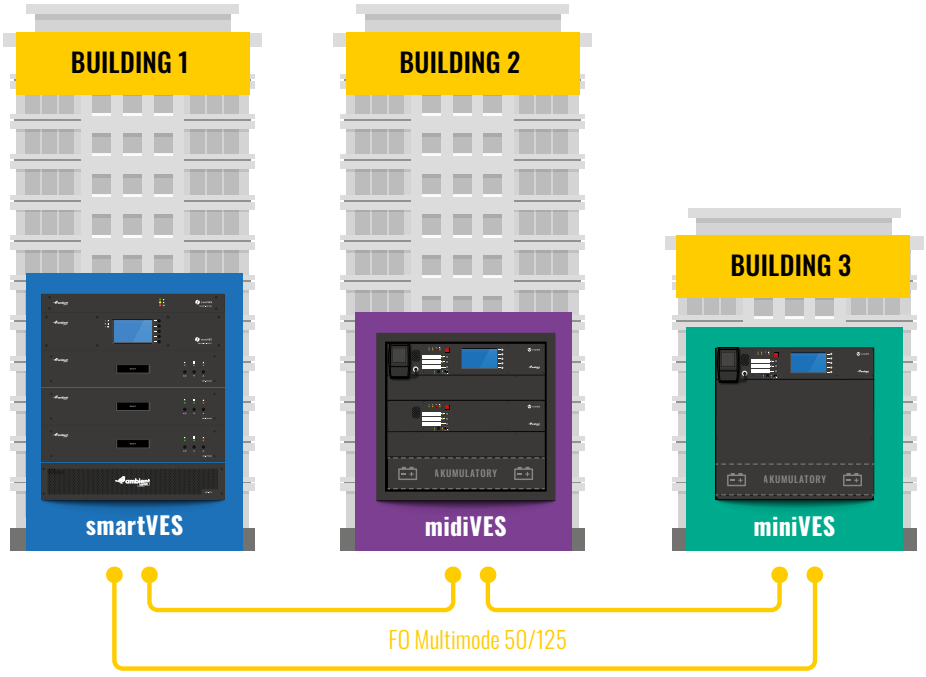

Additional Devices

Increase the functionality of PA/VA systems

Supplementary products

WMC 45
ABT-DFMS-A PP 47
ABT-HL7 49
ABT-EOL 51
ABT-REG1 52
RIIS 53
REDBOX 300S 54
AKU PROTECT 48V 55
MINI CLEAR DOOR 56
NTS-PICO3 57
IMC-150L 59
MÜLLER SC 95.47 PRO 61

WMC

WALL-MOUNTED CONTROLLER

- ✓ *Intuitive and easy operation*
- ✓ *Touch-screen display*
- ✓ *Bluetooth 5.0*
- ✓ *XLR input with 9V Phantom power*

NEW!

For intuitive and easier operation, WMC has been equipped with a touch-screen display. Navigation in the menu and change of settings is possible by means of both control buttons located next to LCD display, and touch-screen display. Wall mounted controller is equiped with Bluetooth audio module which provides wireless audio connection for up to 40 meters between WMC and other Bluetooth source like mobile phone. WMC has 2 local audio inputs on board and 1 audio output which allows for further system extension. Communication with control units takes place via Ethernet 10/100BASE -TX, 1 LAN port. The WMC controller, via a touchscreen colour display, allows convenient and quick selection of the audio source, volume control of audio inputs and sending to selected zones in the system.

CHARACTERISTICS

- » ***4,3" LCD touch screen for fast and clear matricing and volume change***
- » ***Non-symmetrical audio input, (1/8") stereo jack connector***
- » ***Stereo jack socets for Headset / Audio out***
- » ***Power supply via POE or locally 48 VDC***

WMC BOX W

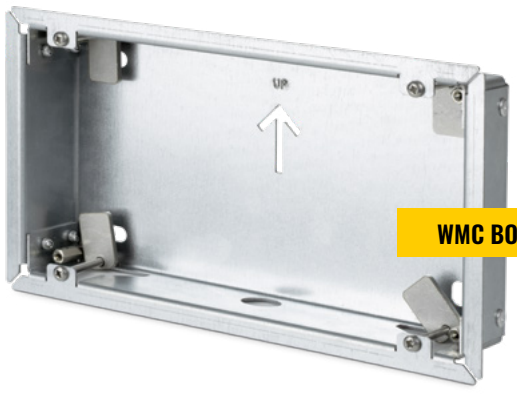

WMC BOX F

	WMC
Power supply	via PoE (RJ45) or by additional input power supply 48V / 15W DC connector 5,5 / 2,1 mm
LCD	LCD, 272 × 480 resolution, 4.3" resistive touchscreen
Number of audio outputs	1 channel audio (headset)
Number of audio inputs	3 channels (Bluetooth, 3,5mm jack, XLR)
Bluetooth audio connetion	Bluetooth 5.0, PIN code Bluetooth security, up to 40 meters connectivity
Network	Single 100 Mbit/s
Audio Inputs	
Input type	single-ended, 3 × bgm
Frequency response	50 Hz … 18 kHz (@3dB)
ADC resolution	32 bit
Sampling frequency	48 kHz
Connector	1 × mini-jack 3,5 mm; 1 × XLR
Microphone input	
Input, connection type	balanced inputs, XLR
Environmental	
Degree of protection	IP 30
Operating temperature	-5°C to 40°C
Operating humidity	15% to 80%
Storage temperature	-20°C to 70°C
Storage humidity	5% do 95%
Mechanical	
Dimensions	194 (W) × 108 (H) × 50 (D) mm
Weight	1,4 kg
Accessories	
Housing	WMC BOX W-m wall-mounted housing, WMC BOX F-m flush mounted housing

ABT-DFMS-A PP

EN 54-16

PLATFORM ANNOUNCEMENT POINT

- ✓ *Monitored microphone and connection*
- ✓ *Dedicated evacuation button*
- ✓ *Three fully programmable buttons*
- ✓ *IP 65 housing*
- ✓ *Lock with double-bit insert-5 mm*

CNBOP-PIB
2374/2015

CE
1438-CPR-0500/W

The ABT-DFMS-A PP is a monitored emergency microphone unit designed to operate a platform announcement point.

The device connects to the core paging system via TCP/IP network, using either copper or redundant fibre optic interface.

The ABT-DFMS-A PP can be used to make live broadcasts to pre-programmed zones or zone groups. It shall also allow to trigger alarm mode and broadcast pre-recorded messages from the systems memory.

The ABT-DFMS-A PP is able to detect and report a button failure and audio path failure, including that of the microphone capsule (the unit supports acoustic surveillance of the microphone component).

The ABT-DFMS-A PP is equipped with an intercom function, allowing to communicate with other emergency microphones in the system.

CHARACTERISTICS

- » ***Built-in 2 contact inputs and 2 relay outputs***
- » ***POE or external power supply***
- » ***Black-box function – recording all announcements played back during an alarm***
- » ***IP 65 housing***
- » ***Both copper and fiber optic TCP/IP interface***

	ABT-DFMS-A PP
Power source	via LAN PoE or local power
Input voltage	48 V connector 2 pin screw 5.08 mm
Power consumption	max 266 mA for 48 V DC
Degree of protection	IP65
Transmission medium	fiber, UTP Cat. 5e
Number of parametric inputs	2
Number of relay outputs	2
Connector type for logic input/output	screw 3.5 mm, 6 pin
Type of fiber optic	modules type SFP / connector SC / LC / multimode or single-mode / E 30 or E 90, OM lub OM2
Listening speaker	
Output	0,5 W
SPL	78 dBA (@1m, 1W)
Frequency response (3 dB)	450 Hz … 8 kHz
Audio input	
Frequency response	400 Hz – 6 kHz (@3dB)
Impedance	500 Ω
Signal	-40 to 30 dBu
Sensitivity	-66 dB
Cable type, length	spiral - 1,5 m
Microphone connector	5 pin DIN
Keyboard and controls	
Number of buttons	3
Number of control panel buttons	2 LED / button
Dimensions of the buttons description	15x25 mm
Three normative LED controls	color LEDs: power – green / failure – yellow / alarm – red
Logic Input / Output	
Number of I / O logic	2 independent channels; galvanically isolated; each channel has 1 fully programmable input and output (NO / NC)
Parametric input source for monitor mode	passive; standard resistors 10 k || 10 kΩ or 4,7 kΩ - - 4,7 kΩ detection thresholds 0/1 / open / set in the application configuration
Type of socket I / O logic	6-pin screw terminal type PHOENIX, 3.5 mm
CPU-OFF switch	slide switch, two position, signaling LED color: yellow
Other parameters	
Operating temperature	0°C to 55°C
Operating humidity	15% to 80%
Storage temperature	-20°C to 70°C
Storage humidity	5% to 95%
Dimensions	400 (W) x 300 (H) x 150 (D) mm
Accessories	connector with screw terminals 6 pins, the distance between the partitions 5.08 mm

ABT-HL7

HEARING LOOP

- ✓ *Loop compatible with IPI4*
- ✓ *Covering to 500 square metres*
- ✓ *Error indication output*
- ✓ *Compatibile with EN 60118-4*
- ✓ *Easy to install*

Amplifier HL7 is designed for transport applications such as platforms, airports or ferry terminals, and public buildings including schools, offices, or courts. The device is equipped with a readable control panel which enables the parameters configuration. Due to the relay output, the device is capable of reporting the mistake to the superior control system. The amplifier is prepared to work with mains power supply 230 VAC.

MODELS	Description
ABT-HL7-D	Free-standing Loop Amplifier
ABT-HL7-W	Surface-mounted Loop Amplifier

	ABT-HL7
Inputs	
Line In	The input impedance: 1k Sensitivity: -20 dBu
Microphone	The input impedance: 1k Sensitivity: -42 dBu Power supply: Phantom power 12V (selectively)
Outreach	The input impedance: >10k Sensitivity: 0 dBu Outreach power: 24VDC max 100mA
Outputs	
Loop	Type: TCM (true current mode) The output voltage: 14V The output power: 1 Ohm: 7.5 A
Line out	The output voltage: 775 m5V
The error output	To 10 dB/Octava depending on the frequency, zone 5kHz
The metal loss compensation	88
Extra Parameters	
The covering area	Up to 500 square metres
Weight	3,25 kg (the surface-mounted chassis) 2,38 kg (the free-standing chassis)
Measurements (H × W × D)	298 × 308 × 74 mm (the surface-mounted chassis) 67 × 218 × 280 mm (the free-standing chassis)
Work Temperature	0 to +40°C
Resistance	IP40
The maximum humidity	95% without condensation

THE INTERFACE LIST

MICROPHONE

» Free-standing model – 3 pin XLR
» Sourface-mounted model – the connector power output type pheanix

THE LOOP OUTPUT

» The connector power output type pheanix

LINE OUT

» The 3-pole connector power output type pheanix

LINE IN

» Free-standing model – 3 pin XLR
» Sourface-mounted model – the connector power output type pheanix

OUTREACH

» The 4-pole connector power output type pheanix

THE ERROR OUTPUT

» The 3-pole connector power output type pheanix

ABT-EOL

EN 54-16

END OF LINE SUPERVISION MODULE

- ✓ *EN 54-16 certified*
- ✓ *Four power settings (A,B,C,D)**
- ✓ *Fits on built-in mounts on selected Ambient System loudspeakers*
- ✓ *Powering of the module from the amplifier*
- ✓ *Loudspeaker line monitoring without additional cabling*
- ✓ *Open-circuit, short and ground leakeage detection*

ABT-EOL monitors the integrity of a loudspeaker line and all of its branches. Supervision of branched lines requires EOL module for each branch. ABT-EOL provides a filtered load exclusively at the pilot tone frequency and increases reliability of loudspeaker surveillance method based on impedance measurement. Module connects in paralel to the last loudspeaker on a line. It has a 4 different modes which has to be selected according to the results calculated by the EOL calculator.

ABT-EOL works only with Multives system in a configuration with a dedicated amplifier for each control card.

INTERCONNECTIONS

- » ***Pair of 20cm leads***
- » ***Phoenix contact type 3,5 mm, 2 pins connector***

	ABT-EOL
Technical specifications	
Type	End of line module for speaker lines
Connector	Phoenix contact type 3,5 mm; 5 pins***
Voltage	100 V loudspeaker line
Load	10 W – 480 W *
Operating temperature	-10°C to 55°C
Storage temperature	-40°C to 70°C
Relative humidity	< 95%
Dimensions	65 (W) x 16 (H) x 37 (D) mm
Mounting	Internally in the loudspeaker / Optional installation box is available
Weight	Approx. 46 g / Set of 10 modules – 500 g

The following speakers work correctly with the ABT-EOL module:

ABT-S106** / ABT-S136** / ABT-S186** / ABT-S206 / ABT-S206B / ABT-S2010 / ABT-W6 / ABT-W6W / ABT-W6/AB / ABT-LA30/60 / MCR-SMSP20 / ABT-P10 / ABT-P20

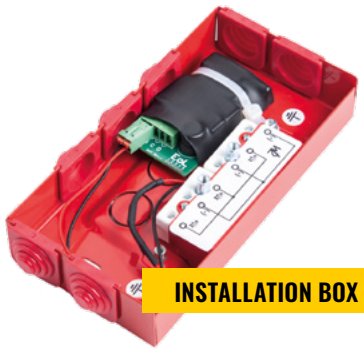

INSTALLATION BOX

* *Use EOL calculator to choose optimal load settings*
** *Installation box required*
*** *Only for Multives system in a configuration with a dedicated amplifier for each control card*

The EOL calculator can be found on the following website: https://ambientsystem.eu/en/customer-area

ABT-REG1

VOLUME CONTROLLER

- ✓ *Volume controller is designed to control 100 V signal. Maximum speaker / speaker group load is 40 W RMS.*

	ABT-REG1
Technical specifications	
Input voltage	100 V
Maximum nominal load	40 W
The frequency range	30 – 20000 Hz
Number of control levels	6
Output power level for each position	-∞, -20, -15, -10, -5, 0 dB
Voltage drive the alarm priority relay	18 – 26,5 V
Current consumption	10 mA
Operating temperature	0°C – 40°C
Overall dimensions	80 mm × 150 mm × 65 mm
Wymiary otworu montażowego	75 mm × 150 mm × 50 mm

RIIS

PLC WITH SNMP V 1,2,3 SERVER

- ✓ *Allows third party systems integration*
- ✓ *Linux based PLC with SNMP server*
- ✓ *Encrypted communication*

The unit is very robust and can operate at both very low and very high temperatures, and has an effective overvoltage protection. The metal casing increases the durability of the product and allows horizontal or vertical mounting on a DIN 35 rail.

RIIS (Remote Independent Integration System) is a device for the transmission of information between the control panels of the security system and IFTER EQU2 or other PSIM or BMS systems.

CHARACTERISTICS

- » ***Optimised for power and computing - support for two independent power sources with low energy consumption.***
- » ***Resistance to adverse weather conditions - can work in both very low and very high temperatures and in humidity up to 95% without condensation.***

	RIIS
Technical data	
Network connectivity	2 × Fast Ethernet
Power consumption	3W
Power supply	10 ÷ 60 VDC
Communication	TCP/IP, RS232
Indicators	LEDs
Work environment	temperature range -40°C to +70°C max. air humidity: 95%
Housing	metal for DIN rail 35
Overvoltage protection	LAN: up to 150A (8/20µs) Power supply: up to 600 W (10/1000 µs)
Dimensions	118 × 110 × 36 mm

RedBox 300S

ENCLOSURE FOR FIRE MICROPHONE STATION

Wall enclosure manufactured out of stainless steel. Designed for the emergency microphone station (type ABT-DFMS) and up to one keyboard extension (type ABT-EKB-20M).

Set includes a pack of installation screws for the ABT-DFMS and ABT-EKB-20M (4 x M5x8), 4 x ZWY-6K 10 x 50 screws for fixing the RedBox to the wall, as well as 4 cable glands. ABT-DFMS, ABT-EKB-20M and door lock is not included.

	REDBOX 300S
Technical specifications	
Color	RAL 3000
Weight	3 kg
Dimensions (W x H x D)	300 × 310 × 150 mm

CHARACTERISTICS

- ***Powder coated in red – RAL 3000***
- ***5 cable entries Ø19 mm in the upper and lower part of the housing***
- ***Internal mounting holes for installation ABT-DFMS and ABT-EKB-20M***
- ***Ø22 mm hole for cylindrical lock for universal cabinets***
- ***IP66 rating***

AKU Protect 48V

EQUALIZER/BALANSER FOR AGM, GEL, LIFEPO4 BATTERIES

- ✓ *Reverse polarity protection*
- ✓ *Balanser for AGM, GEL, LiFePO4 batteries*
- ✓ *Optimizing current 0-10A*
- ✓ *Connection of up to 4 batteries at the same time*

Balanser AKU PROTECT is designed for serially connected batteries, aiming to maintain equal voltage among batteries during charging and discharging. It is compatible with gel, AGM, and lead-acid batteries. When batteries are connected in series, voltage discrepancies may arise due to variations in the chemical composition of each cell and temperature changes. This voltage inconsistency can lead to an imbalance between batteries, with one battery being overloaded while the other is insufficiently charged. Furthermore, voltage differences during charge and discharge cycles can accelerate the process of premature battery damage. Balanser AKU PROTECT facilitates a smooth flow of current from batteries with higher voltage to those with lower voltage until they reach equilibrium. The device automatically initiates operation when the voltage difference between batteries reaches 10 mV. It can serve as a permanent component of a battery system, providing automatic control of energy balance and eliminating the need for manual adjustment.

	BALANSER AKU PROTECT 48V
Technical specifications	
Battery nominal voltage	4*(2.4V/3.6V/6V/9V/12V)
Optimizing current	0-10A
Quiescent current	5mA(12V) 1.2mA(2.4)
Low Voltage Disconnect	1.8V
Protection	Reverse polarity protection
Dimensions	62 × 124 × 27mm
Weight	400g

Mini Clear Door

PROTECTING COVER

Mini clear door – a cover protecting against unauthorized access to the activation elements with a pocket for documentation.

The cover is made of 5 mm thick plexiglass. It is designed to be mounted with the miniVES and midiVES housing. Enclosure including 8× 2.5 mm (M4) HEX screws package for mounting. The door lock is not included in the scope of the delivered package.

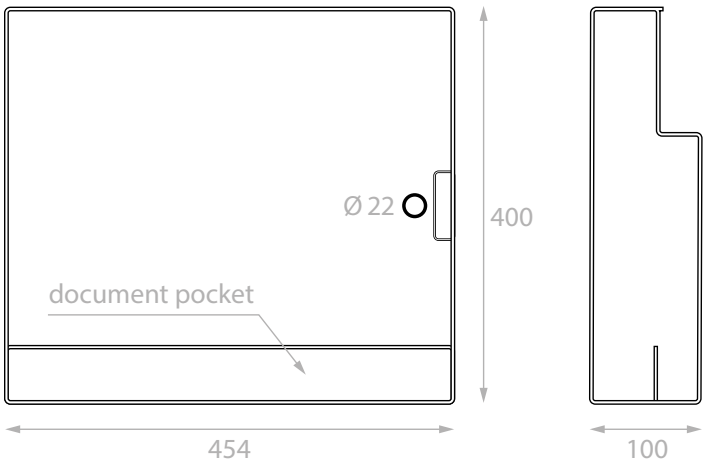

	MINI CLEAR DOOR
Technical specifications	
Material	plexiglass
Color	transparent
Weight	3 kg
Dimensions (W × H × D)	454 × 400 × 100 mm
Lock hole diameter *	Ø 22 mm

** Lock is not included*

NTS-pico3

NTP/IEEE 1588 MINIATURE TIME SERVER

- ✓ *100/10Mbps Ethernet LAN*
- ✓ *Hardware time stamping*
- ✓ *Linux & TCP/IP (IPv4/IPv6*)*
- ✓ *1PPS precission time support*
- ✓ *NTP authentication*
- ✓ *Suitable for Industry 4.0, Autonomous Vehicles, Process Automation, Smart City*

NTS-pico 3 is 3rd generation PICO miniature time server from Elproma. It delivers UTC ref. time directly to network using NTP and PTP protocols. Standard version of product includes hardware time stamping of 1 PPS and IEEE 1588v2 packets (hardware stamping is also possible for RTC* and NTP PTP cross timestamp). It heavily improves accuracy of synchronization. NTS-pico 3 is equipped with a single 100 Mbps. It supports both IPv4 and IPv6. The Server has been designed for small industrial LAN networks. It has a passive cooling and it can operate 24/7 in harsh environmental conditions. It is powered by 9-30 VDC. The NTS-pico 3 time server supports crypto authentication for NTP operations. Product is originally equipped with 38 dB GNSS antenna and 30 meter coax, SMA-ended cable. Surge arrestor shall be purchased separately. A built in GNSS satellite receiver includes TCXO oscillator for a short-time holdover. Server supports simultaneously GPS and GALILEO or GLONASS or QZSS/ BEIDOU* L1*. NTS-pico3 has ultra fast Time To First Fix (TTFF) start up supported by SBAS systems. Multiple NTS-pico3 can be mounted in 19" rack cabinet acting as a multiple LAN time server (1U).

* Extra feature requiring additional hardware and/or software firmware upgrade

	NTS-pico3
Technical	
GNSS Synchronization and SBAS support	GPS, L1 w/ AGPS (1575,42MHz), GLONASS L1 (1598,06 1605,38MHz), GALILEO E1 (1575,42MHz), BEIDOU L1 (1561,09 1575,42MHz), EGNOS, WAAS, GAGAN
Supported Time Protocols	NTP v2, v3, v4 (RFC1305, RFC1119, RFC5905, RFC5906, RFC5907, RFC1769), PTP v2 IEEE1588 2008 (PTPv2), gPTP (802.1AS), SNTP (RFC2030), TSA a Time Stamping gateway for link with Elproma NTS TSA RFC316*
Inputs/Outputs	1x LAN Ethernet 10/100 Base T RJ45), 1x SMA GNSS antenna, 1x SMA 1PPS* output, 1x RJ45 RS 232C 1x RJ45 1PPS* input 1x Micro USB 2.0
Hardware	Heavy Duty Industrial Solution (metal housing), MTBF 50000hrs
Remote configuration	HTTP, HTTPS, SSH, TELNET*, NTPQ/ NTPDC, SNMP*
MultiSAT GNSS receiver antenna	32 channel (acquisition: 143dBm; reacquisition: 160dBm; tracking: 160dBm), GNSS active marine antenna, w/ 38dB amplifier and 30m H155 coax cable (SMA ended), Receiver accuracy RMS is better than 15 ns (nanoseconds)
Accuracy (better than)	
GNSS Multi SAT receiver to UTC (RMS)	15 ns (nanoseconds)
NTP client via public Internet	100 ms (miliseconds)
NTP client at LAN	500 µs (microseconds)
PTP hardware timestamping at LAN	200 ns (nanoseconds)
OSC holdover* (1 hour)	4 ms (miliseconds)
OSC holdover* (24 hours)	100 ms (miliseconds)
Physical	
Dimensions	83 × 54 × 26mm
Net weight (NTSpico-3)	0.3kg
Net weight (GNSS Antenna w/30m cable)	2.3kg
Box gross weight (NTS pico3 & Antenna)	3.0kg
Power	9-30VDC (backup lithium* battery: 3V 620mAh)
Operating temperature	-20°C to 70°C
Storage temperature	-40°C to 85°C
Humidity	up to 95 % (non condensing), conformal coating option*

IMC-150LI

LONG REACH ETHERNET EXTENDER

- ✓ *Extends Ethernet up to 800m at 10 Mbps or 500m at 100 Mbps over UTP cable*
- ✓ *Extends Ethernet up to 1km at 10 Mbps or 500m at 100 Mbps over Coaxial cable (IMC-150LI)*
- ✓ *Railway Trackside EN 50121-4*
- ✓ *Features Link Fault Pass Through (LFPT)*
- ✓ *Switch-selectable for configuring LAN rate and connection type*

The extender IMC-150LI is a device that allows you to extend data transmission over a distance of more than 100 meters.

The device supports 10/100 Mbps Ethernet via twisted pair (CAT-5, UTP) or coaxial cable. It provides a user-configurable selection of LFPT functions via DIP switch, enforces speed settings, is flexible and freely extends existing Ethernet networks to reach remote IP devices. The IMC-150LI extender provides a twisted pair (CAT-5, UTP) and coaxial cable connection that transmit data over a maximum distance of 800 m and 1 km, respectively.

The IMC-150LI used in point-to-point topology offers the best solution for commercial buildings, schools, hospitals, airports and virtually anywhere where Ethernet transmission over a distance of more than 100 meters is required. It also allows the use of existing infrastructure (e.g. telephone cable) when replacing the existing cable system is impossible or not cost-effective.

	IMC-150LI
Communications	
Standard	IEEE 802.3, 802.3u, 802.3x
LAN	10/100Base-T(X)
Transmission Speed	Up to 100 Mbps
Interface	
1.5M CAT5 Ethernet cable	› 1 x 10//100Mbps RJ-45 › 1 x 10/100Mbps Combo UTP/COAX
DIP Switch	LFPT, AUTO-Nego, Speed, UTP/COAX PIN 1 LFPT ON/OFF PIN 2 AUTO ON/OFF (OFF to take effect for PIN 3) PIN 3 SPEED ON:100Mbps / OFF:10Mbps PIN 4 ON:COAX / OFF:UTP
LED Indicators	PWR, 1-PAIR, COAX P1 10M LNK/ACT, 100M LNK/ACT P2 10M LNK/ACT, 100M LNK/ACT
Power	
Power Consumption	2.401W
Power Input	12 ~ 48V DC
Power Output	30W
Connectors	2P Pluggable Terminal Block, DC Jack
Physical	
Enclosure	IP30, Metal shell with solid mounting kits
Dimensions (W × H × D)	93 × 21 × 98 mm
Mounting	DIN-Rail, Wall
Protection	
Reverse Polarity	YES
Environment	
Operating Temperature	-40 ~ 75°C
Storage Temperature	-40 ~ 85°C
Operating Humidity	10 ~ 95% (non-condensing)
Storage Humidity	10 ~ 95% (non-condensing)

Müller SC 95.47 PRO

MASTER CLOCK

The MASTERCLOCKS SC 95.47 pro is a cutting-edge solution designed to manage and synchronize up to 200 slave clocks without the need for an additional power supply. This innovative system, including 24 V DC slave clocks and a GPS-time antenna, ensures accurate timekeeping across various applications. Its capability to automatically adjust and correct the time of slave clocks after any supply voltage interruption makes it an essential tool for facilities like schools, sports halls, hospitals, factories, and large buildings, as well as for church clocks.

With its robust design, the MASTERCLOCKS SC 95.47 pro is short-circuit proof, offering reliability and peace of mind. The device features an automatic summertime adjustment according to the European standard, ensuring seamless transitions with either 60 additional pulses or by suppressing the pulse for one hour. It also monitors the slave-clock-line for any malfunctions, displaying alerts clearly on its illuminated display for easy troubleshooting. Enhanced security is provided through a PIN-code system, alongside convenient features like a data-key function, DCF/GPS synchronization, and a front switch for controlling external applications. The time switch function of the MASTERCLOCKS SC 95.47 pro is equally impressive, offering 4 change-over channels and the capacity to store up to 300 memory locations for daily, weekly, and yearly programs. With a minimum interval of one minute, users can program the device for specific dates, manual overrides, and utilize functions like elapsed time and pulse counters, cycle, and timer functions, making it a versatile tool for precise time management.

Notably, the device includes a yearly program with special functions for Easter, weekdays, and extra switching times. Its user-friendly interface features a large dot matrix area for displaying text clearly, making programming quick and intuitive. The MASTERCLOCKS SC 95.47 pro promises unlimited program security through E2-PROM, and it is programmable via PC with the Data-key DK pro and Programming packages PP 50 pro / PP 60 pro, offering flexibility for all users.

Designed for operation in dry environments and requiring installation as per the instruction manual, the MASTERCLOCKS SC 95.47 pro is tailored for the efficient regulation of slave clocks, ensuring precise timekeeping where it matters most.

CHARACTERISTICS

- ***No extra power supply unit needed (24 V DC slave clocks and GPS-time antenna included)***
- ***Short-circuit proof***
- ***Automatic adjustment of the slave clocks***
- ***Illuminated display***
- ***DCF / GPS function***
- ***Daily, weekly and yearly program***
- ***300 memory locations***
- ***Yearly program within Easter function, Weekday function and Extra-switching-time function***
- ***Display with a large dot matrix area to provide two high resolution text lines***
- ***Easy handling***
- ***Quick and intuitive programming***
- ***Unlimited program security by E2-PROM***
- ***Elapsed time and pulse counter***

	MÜLLER SC 95.47 PRO
Technical	
Output voltage	24 V-pole changing pulse
Output current	1,5 A
Max. number slave clocks	approx. 200 slave clocks 7 mA
Output signal	Pole changing pulse
Pulse sequence	Normal operation = 1/Min., During adjustment = 10/Min.
Pulse length	approx. 2 sec. (adjustable)
Supply voltage	230 V, 50-60 Hz
Power consumption (real power)	1,2 -3,2 W (depending on the switching status)
Channels (potential-free)	Change-over, contact gap 3 mm (µ)
Contact material	AgNi
Switching capacity per channel	Resistive load: 5 A/ 250 V- at coscp=1, Inductive load: 5 A at coscp=0,6
Min. switching power	300 mW (5 V/ 5 mA)
Max. starting current	30 A
Filament Lamp, Halogen Lamp	400 W
Fluorescent Lamp with electron. lamp ballast	100 W
Fluorescent Lamp with convent. lamp ballast	100 W
LED (230 V-)/ CFL	50 W
Switching functions	ON / OFF / pulse / cycle / yearly program
Pulse length	00:01 up to 59:59 mm:ss
Pulse length Timer (man. switching)	0:00:01 up to 9:59:59 h:mm:ss
Pulse/Pause length Cycle	0:00:01 up to 9:59:59 h:mm:ss
Memory locations	300
Minimum interval	1 Min.
Time base	Quartz / DCF (FU 20.00 pro) / GPS (FU 3x.00 pro)
Quartz accuracy (at 20 °C)	≤ ±0,5 Sec./day (Quartz accuracy optimized for typical ambient conditions)
Power back-up (at 20 °C)	approx. 10 years (depends on the Lithiumbattery life)
Display	high resolution LCD (visible area 12,8 cm2)
Permitted ambient temperature	-30 to +50 °C
Housing	self-extinguishing thermoplastic
Dimensions	128.5 × 76.2 mm
Mounting	Pluggable into 19"-housing
Type of protection	IP 00 to DIN EN 60529
Class of protection	I - when installed according to regulations
Mode of operation	1 BSTU
Degree of contamination	2
Rated surge voltage	4 kV
Frontswitch	potential-free frontswitch 5 A/ 250 V- at coscJ ≥ 1

21 NOV WED
15 07
Fanvil
Jone
Sunnie
Lita
SIP3
ambient
SYSTEM
Ben
Rush
Abby
CallLog
Contact
DND
Menu
OK
1
2 ABC
3 DEF
4 GHI
5 JKL
6 MNO
7 PQRS
8 TUV
9 WXYZ
*.
0
#

IP Intercom System

Stay connected, stay safe

Introduction

IP INTERCOM SYSTEM 65

Gateways and servers

ISE COMM 67
ISE VES SYSTEM GATEWAY 69

IP Audio Intercoms

ICO EMERGENCY 71
ICO EMERGENCY S01/S02 73
ICO EMERGENCY S03 75
ICO FRONTIER 77
ICO CLEANROOM 79
ICO STRONG 81
ICO PHP S01/S02 83

Intercom Housings

SURFACE MOUNT HOUSING 85
RECESSED HOUSING 86

Desktop Stations

ABT-ICDG-01 87
ABT-ICD1 89

IP Amplifiers

ICO MAM 91

SIP Loudspeakers

ABT-S206S 93
ABT-W6S 95
ABT-T2515S 97

IP Intercom System

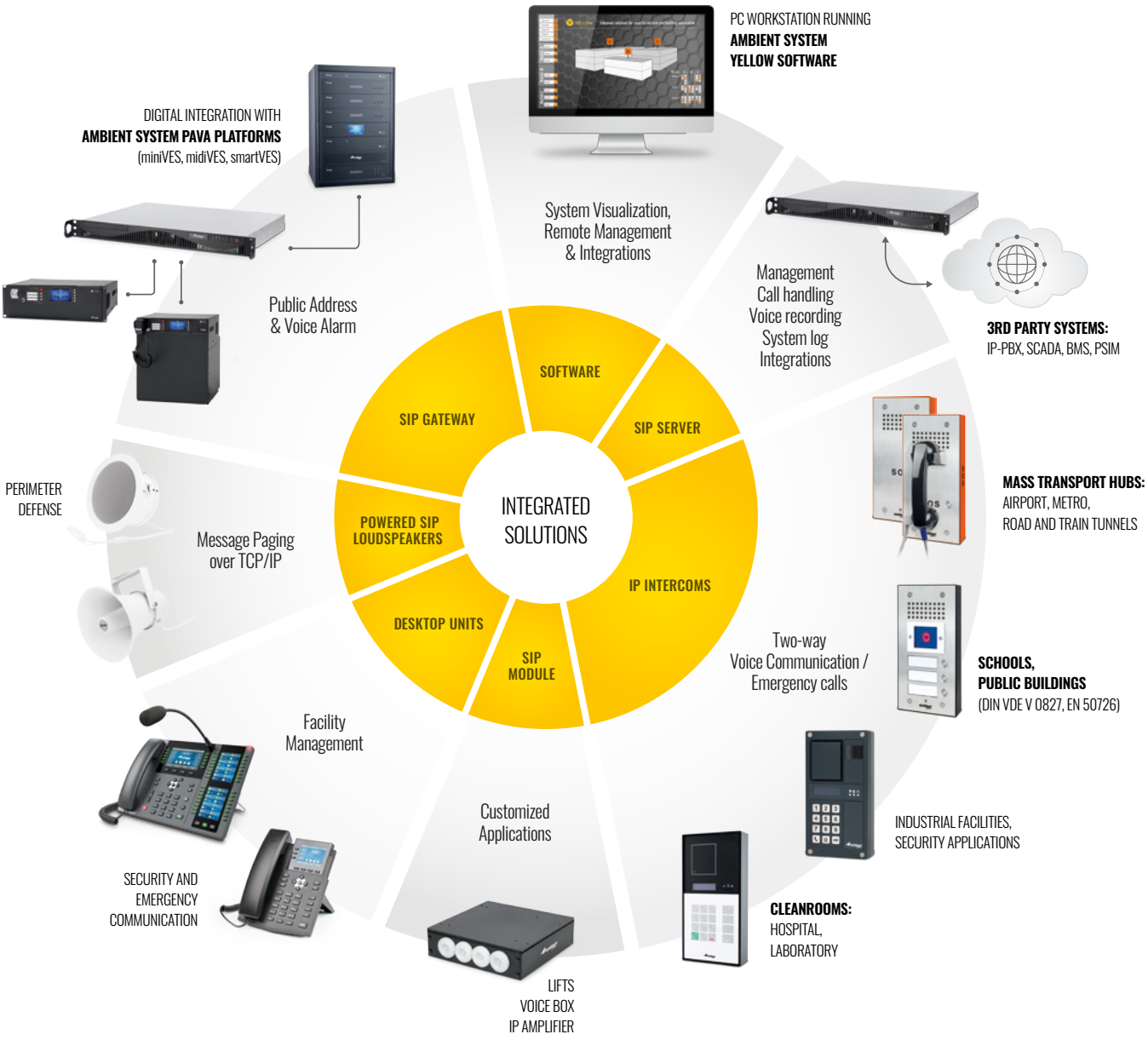

The IP Intercom System is a modern and reliable tool for voice communication. Intercom integrated with the building's security systems enable the streamlining of information flow and a reduction in response time to events. As a key element of communication and security, the system monitors the operational status of connected intercoms, logs system events, and enables audio recording, ensuring comprehensive operational support.

System Functions

Enables natural, two-way conversations, including conference calls with multiple users simultaneously. A call forwarding function is also available.

Enables remote control of secure access by the intercom relay via remote dial code or using the keypad.

Enables broadcasting voice messages to all intercoms, selected groups, or individual devices. Messages can be delivered live by the user or played back from the system's memory.

Extensive capabilities of integration with visualization and management systems (SCADA, PSIM, BMS, etc.) via SNMP and REST API protocols (with the option of direct connection to the intercom).

Acoustic monitoring of the speaker-microphone path. The functional test involves the intercom emitting a specific test signal that must be correctly received by its microphone.

Continuous monitoring of connected intercoms, distinguishing between their active status, idle state, and any potential malfunctions

The server maintains a detailed log of system operations. Additionally, for enhanced security and to facilitate the later analysis of events, there is an option to record the content of conversations.

Digital signal processing algorithms ensure high speech intelligibility even in challenging acoustic environments (reverberation, noise). This includes features such as automatic volume control, echo cancellation, and noise reduction.

ISE COMM

INTERCOM SERVER

- ✓ *IP Intercom system supervision*
- ✓ *Call management*
- ✓ *Integration with third-party systems*

ISE COMM is an advanced intercom server responsible for system supervision and maintenance, call handling, and integration with third-party systems. ISE COMM enables easy control and access to information about the status of connected devices and current system status. The server maintains a detailed system operation log. The optional voice recording function facilitates the subsequent analysis of events. The ISE COMM server enables integration with visualization and management systems (BMS, PSIM, CCTV, etc.) using the SNMP protocol. The server also enables the integration of the IP intercom system with external IP telephony systems.

	ISE COMM
Procesor	Intel Xeon
Chipset	Intel
Operating memory	1 × 8 GB
Hard drive	1 × 240 GB SSD
Network	2 × Intel i210 AT Gigabit LAN
Ports	2 × USB 2.0 / 2 × USB 3.0 / 2 × 1 Gbit/s
Dimensions	43 mm (1U) × 437 mm × 290 mm
Operating system	Linux
Power supply	230 V AC

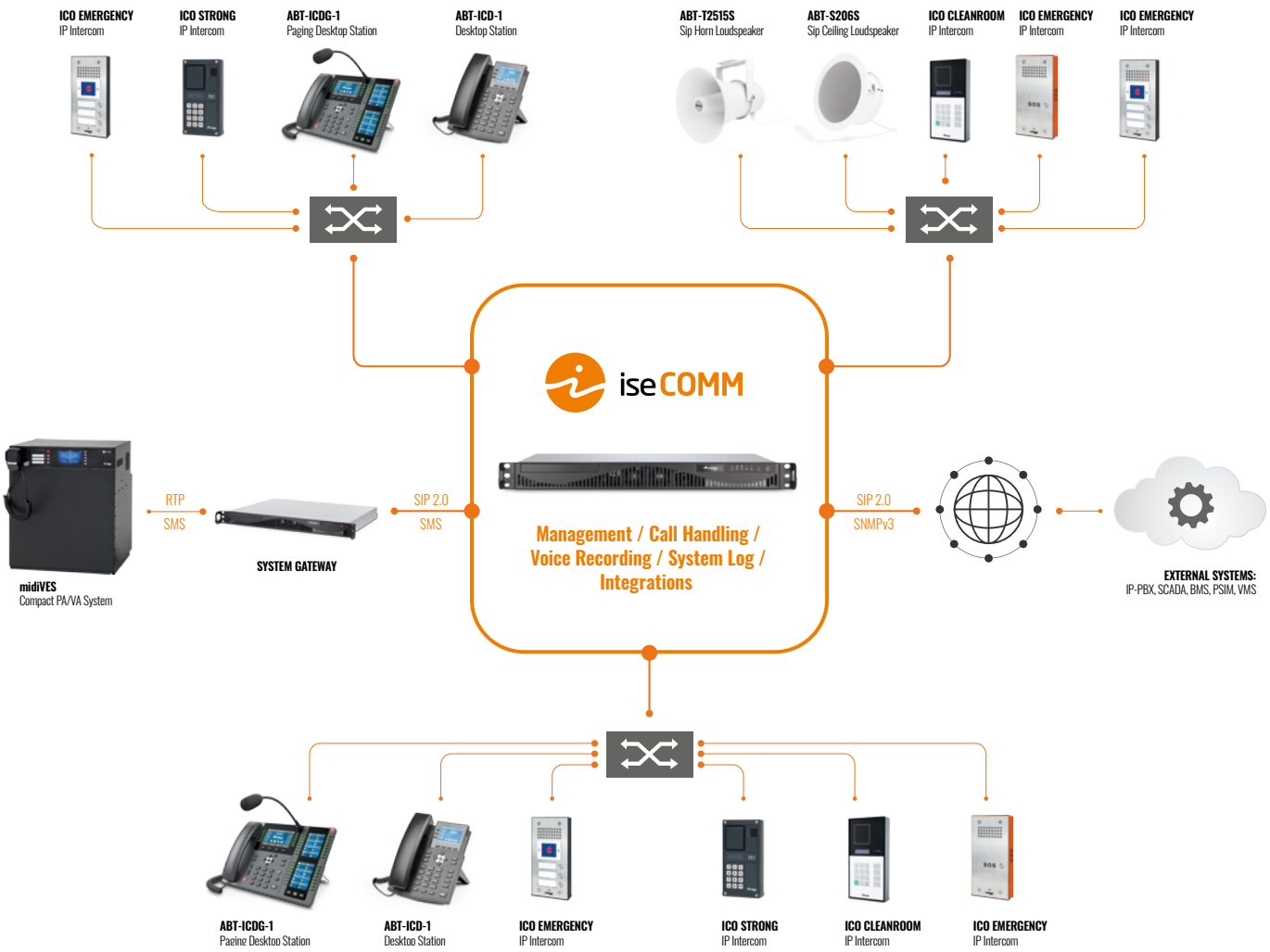

The ISE COMM Server is supplied with a base license.
The expansion of its functionalities is implemented through a licensing structure:

MODELS	Description
EndP	End Point License - enables the connection of one user
ExtL	External Line License – enables the configuration of one outgoing connection
ReC	Record License – enables audio recording for one channel
BacK	Backup License – enables the configuration of a redundant server

ISE VES SYSTEM GATEWAY

SYSTEM GATEWAY

- ✓ *Digital integration of VoIP and PAVA systems*
- ✓ *Digital voice announcer with scheduler*
- ✓ *Management via an easy-to-use browser interface*

ISE VES SYSTEM GATEWAY is a PAVA exchange server with SIP access functionality. The server enables the integration of distributed PAVA systems into an extensive audio network. It also allows for the integration of said systems with IP telephony systems in the digital domain, utilizing the SIP Trunk feature. ISE VES SYSTEM GATEWAY supports up to 8 simultaneous SIP calls into the PAVA network, allowing to route these calls to selected zones. The server has an incoming call recording functionality for subsequent analysis. It also features a message player and scheduler, manageable through an intuitive browser interface secured against unauthorized access. Both voice messages and other broadcast functions of the server can be controlled remotely. ISE VES SYSTEM GATEWAY is a solution that enables the efficient distribution of addressed voice messages to the PAVA network from various sources. Thanks to it, IP intercom, IP telephony systems, and service providers can effectively communicate with the Public Address and Voice Alarm system.

	ISE VES SYSTEM GATEWAY
Procesor	Intel Xeon
Chipset	Intel
Operating memory	1 × 8 GB
Hard drive	1 × 240 GB SSD
Network	2 × Intel i210 AT Gigabit LAN
Ports	2 × USB 2.0 / 2 × USB 3.0 / 2 × 1 Gbit/s
Dimensions	43 mm (1U) × 437 mm × 290 mm
Operating system	Linux
Power supply	230 V AC or 48 V DC

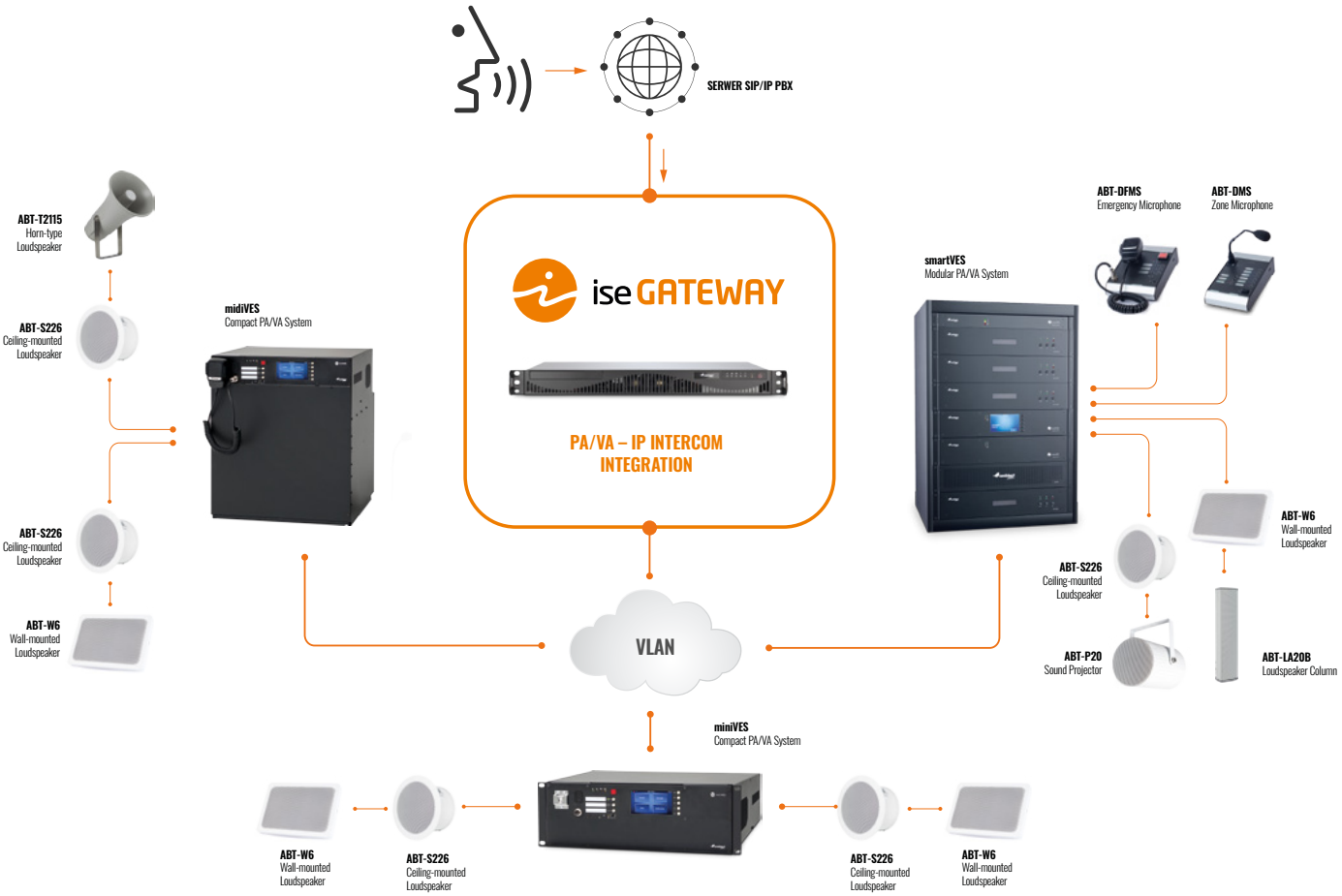

ISE VES SYSTEM GATEWAY functionality defined within the licensing structure:

LICENSES	Description
Z-	Zones License – enables the configuration of a broadcast group
SF	Store&Forward License – enables the buffering of messages addressed to busy groups
T	Timer License – enables the creation of an event schedule
P	PBX License – enables the registration of ISE VES SYSTEM GATEWAY in a SIP Proxy
SG	Segment License – enables adding connections to Ambient System PAVA subsystem
R	Record License – enables the recording of outgoing calls to Ambient System PAVA central units
B	Backup License – enables the configuration of a redundant server

ICO EMERGENCY

IP INTERCOM

- ✓ *Intercom with emergency button*
- ✓ *Compliance with DIN VDE V 0827 standard*
- ✓ *Up to 3 programmable buttons*
- ✓ *Vandal-resistant housing IK08/IP54*
- ✓ *Acoustic monitoring of speaker-microphone path*
- ✓ *DSP functions: noise reduction, echo cancellation, automatic volume control*
- ✓ *SIP2.0 / SNMPv3*

EDUCATIONAL FACILITIES · DIN VDE V 0827 · EN 50726

ICO EMERGENCY is an emergency intercom designed in accordance with the DIN VDE V 0827 standard, ideal for applications requiring rapid notification. It is equipped with a large, intuitive red emergency button protected by a breakable cover. Activating this button initiates a priority connection with the intercom system operator or the automatic playback of a pre-programmed voice message from the server. The intercom additionally offers 1 to 3 programmable buttons that can be configured for standard call functions. ICO EMERGENCY has 3 relays and 6 GPIO inputs/outputs, enabling integration with external devices such as strobes, electronic locks, or external buttons. ICO EMERGENCY can transmit information about its status to management systems (PSIM, BMS, etc.) directly, bypassing the SIP server, using the SNMP protocol. Voice communication is hands-free, utilizing advanced digital algorithms that improve sound quality through noise reduction, automatic volume control, and echo cancellation. ICO EMERGENCY can be powered via PoE or using an external DC power supply. The vandal-resistant housing with IP54/IK08 rating ensures reliability in harsh environmental conditions. Dedicated mounting accessories allow for surface, flush, and drywall mounting.

MODELS	Description
ABT-ICO-EME-B1E	Intercom equipped with a single programmable button
ABT-ICO-EME-B2E	Intercom equipped with two programmable buttons
ABT-ICO-EME-B3E	Intercom equipped with three programmable buttons

ACCESSORIES	Description
ABT-IAC-BOX01-PB	Mounting box for modular and plasterboard walls
ABT-IAC-BOX01-F	Flush-mounting box
ABT-IAC-BOX01-W	Surface-mounting box

	ICO EMERGENCY
Audio	
Loudspeaker	1 × built-in speaker with rated power of 5W
Amplifier	Class D; 15 W @4 Ohm (1% THD+N)
Microphone	1 × MEMS type (frequency response 60 Hz – 20 kHz)
Audio input	1 × balanced line input – nominal level 775 mV RMS
Audio output	1 × balanced line output – nominal level 775 mV RMS
Headphone output	Output power 0,25W, Minimum load impedance 16 Ohm
Codecs	Speex, iLBC, GSM, PCMU, G722, Opus, G729, L16
Indicators and Control	Output Power 0.25 W, Minimum load impedance 16 Ω
Emergency button	1 × red emergency button, behind breakable glass cover
Programmable button	1-to-3
Interfaces	
Ethernet ports	2 × Ethernet port
Relays	2 × make contact input: 30 VDC, 1A / 125 VAC, 0.3A, max. switching voltage 250 VAC / 220 VDC, max. switching power 62.5 VA / 30 W, max. load current 2A 1x active relay: 12 VDC, max. current 100mA
GPIO	6 × digital input/output: parametric input (2-state); logic output 0-5V, current output 18mA, common reference point
LED Driver	12V, current limiting resistor 300 Ohm
Power supply	
PoE	IEEE 802.3af 3af / Class 0, IEEE 802.3at / max. 12.95W (RJ45)
DC	12V / 2A power supply (screw terminal)
Environmental parameters	
Operating Temperature	-40 to +65°C
Relative Humidity	10% to 95% (non-condensation)
Mechanical Resistance	IK08
Dust/water protection	IP54
Physical parameters	
Dimensions (H × W)	137 × 277 mm
Weight	1500 g
Material	Stainless steel

ICO EMERGENCY S01/S02

IP INTERCOM WITH HANDSET, DEDICATED FOR TUNNEL APPLICATIONS

- ✓ *Wall-mounted intercom equipped with a handset*
- ✓ *Up to 2 programmable buttons*
- ✓ *Vandal-resistant housing IK10/IP65*
- ✓ *Acoustic monitoring of speaker-microphone path*
- ✓ *DSP functions: noise reduction, echo cancellation, automatic volume control*
- ✓ *SIP2.0 / SNMPv3*

ICO EMERGENCY S is an intercom specifically designed for applications with very high background noise levels (e.g., ventilation noise, road noise). To maximize speech intelligibility, the device is equipped with a handset, lifting which will automatically initiate a connection with the operator. The ICO EMERGENCY S housing features high vandal resistance (IK09) and an IP65 protection rating, ensuring reliability in demanding environmental conditions. ICO EMERGENCY S has 3 relays and 6 GPIO inputs/outputs, enabling integration with various external devices such as strobe, electronic locks, and specialized buttons. Additionally, the intercom can autonomously report its status to building management systems (PSIM, BMS, etc.) using the SNMP protocol, without the need to involve the SIP server. This allows for monitoring events such as the opening of shelter doors, evacuation routes, or the enclosure in which the device is mounted. ICO EMERGENCY S offers flexible mounting options: surface-mounted, flush-mounted, or in drywall constructions. An orange housing variant with 'SOS' markings on the sides is also available, further enhancing its visibility in emergency situations. ICO EMERGENCY S can be powered via standard PoE or using an external DC power supply.

MODELS	Description
ABT-ICO-FRO-S01	Intercom equipped with a single programmable button
ABT-ICO-FRO-S02	Intercom equipped with handset, no buttons

ACCESSORIES	Description
ABT-IAC-BOX01-PB	Mounting box for modular and plasterboard walls
ABT-IAC-BOX01-F	Flush-mounting box
ABT-IAC-BOX01-W	Surface-mounting box
ABT-IAC-BOX01-WO	Orange surface-mounted housing with 'SOS' markings, supports IP65

	ICO EMERGENCY S01 / S02
Audio	
Loudspeaker	1 × built-in speaker with rated power of 5W
Amplifier	Class D; 15 W @4 Ohm (1% THD+N)
Microphone	1 × MEMS type (frequency response 60 Hz – 20 kHz)
Handset	1 × handset with flexible cord (S01 variant)
Audio input	1 × balanced line input – nominal level 775 mV RMS
Audio output	1 × balanced line output – nominal level 775 mV RMS
Headphone output	Output power 0,25W, Minimum load impedance 16 Ohm
Codecs	Speex, iLBC, GSM, PCMU, G722, Opus, G729, L16
Indicators and control	
Programmable button	1 (S01 variant)
Interfaces	
Ethernet ports	2 × Ethernet port
Relays	2 × make contact input: 30 VDC, 1A / 125 VAC, 0.3A, max. switching voltage 250 VAC / 220 VDC, max. switching power 62.5 VA / 30 W, max. load current 2A
GPIO	6 × digital input/output: parametric input (2-state); logic output 0-5V, current output 18mA, common reference point
LED Driver	12V, current limiting resistor 300 Ohm
Power supply	
PoE	IEEE 802.3af 3af / Class 0, IEEE 802.3at / max. 12.95W (RJ45)
DC	12V / 2A power supply (screw terminal)
Environmental parameters	
Operating Temperature	-40 to +65°C
Relative Humidity	10% to 95% (non-condensation)
Mechanical Resistance	IK10
Dust/water protection	IP65
Physical parameters	
Dimensions (H × W)	137 × 277 mm
Weight	1500 g
Material	Stainless steel

ICO EMERGENCY S03

IP INTERCOM FOR PENITENTIARY FACILITIES

- ✓ *Heavy-duty wall-mounted intercom*
- ✓ *Vandal-resistant housing IK10/IP65*
- ✓ *2 programmable buttons*
- ✓ *4 auxiliary buttons*
- ✓ *Acoustic monitoring of speaker-microphone path*
- ✓ *DSP functions: noise reduction, echo cancellation, automatic volume control*
- ✓ *SIP2.0 / SNMPv3*

ICO EMERGENCY S03 is an intercom dedicated to penitentiary facilitiy applications, where there is a need for increased mechanical resistance and necessity to integrate additional functionalities, such as operating window opening mechanisms, controlling lighting, or managing the public address system. The ICO EMERGENCY S03 housing features high vandal resistance (IK10) and an IP65 protection rating, ensuring reliability in demanding environmental conditions.

It is designed for flush mounting using the dedicated mounting box ABT-IAC-BOX01-F. The front panel of the ICO EMERGENCY S03 is equipped with 2 quick dial buttons and a group of 4 auxiliary buttons. Two buttons are used to operate the integrated multicast radio receiver. The remaining two buttons enable the control of external devices such as the window operator and room lighting. ICO EMERGENCY S03 has 3 relays and 6 GPIO inputs/outputs, enabling integration with various external devices such as strobe, electronic locks, and specialized buttons. Moreover, ICO EMERGENCY S03 can autonomously transmit information about its status and the status of the aforementioned relays and GPIOs to building management systems (PSIM, BMS, etc.) directly, bypassing the SIP server, using the SNMP protocol. ICO EMERGENCY S03 can be powered via standard PoE or using an external DC power supply.

MODELS	Description
ABT-ICO-FRO-S03	Intercom dedicated to penitentiary applications

ACCESSORIES	Description
ABT-IAC-BOX01-F	Flush-mounting box

	ICO EMERGENCY S03
Audio	
Loudspeaker	1 × built-in speaker with rated power of 5W
Amplifier	Class D; 15 W @4 Ohm (1% THD+N)
Microphone	1 × MEMS type (frequency response 60 Hz – 20 kHz)
Audio input	1 × balanced line input – nominal level 775 mV RMS
Audio output	1 × balanced line output – nominal level 775 mV RMS
Headphone output	Output power 0,25W, Minimum load impedance 16 Ohm
Codecs	Speex, iLBC, GSM, PCMU, G722, Opus, G729, L16
Indicators and control	
Quick dial button	× 2
Radio buttons	2 × (VOL+, VOL-)
Auxiliary buttons	2 × Public Address System attenuation (VOL+, VOL-)
I/O (Input/Output)	
Number of terminals	6 pcs of programmable terminals, each can be input/output or LED driver
Digital input	Self polarized 2 state logical input with hysteresis for resistance defined source, two 4k7 series resistors for LOW state and one 4k7 resistor for HIGH state. OPEN and SHORT states also supported.
Digital output	0-5V, current 18mA, overvoltage and reverse current protected -0,7...5,5V, common reference ground
LED driver	source series resistance 300R
Power supply	
PoE	IEEE 802.3af 3af / Class 0, IEEE 802.3at / max. 12.95W (RJ45)
DC	12V / 2A power supply (screw terminal)
Environmental parameters	
Operating Temperature	-40 to +65°C
Relative Humidity	10% to 95% (non-condensation)
Mechanical Resistance	IK10
Dust/water protection	IP65
Physical parameters	
Dimensions (H × W)	137 × 277 mm
Weight	1500 g
Material	Stainless steel

ICO FRONTIER

IP INTERCOM

- ✓ *Basic intercom*
- ✓ *Up to 3 programmable buttons*
- ✓ *Vandal-resistant housing IK08/IP54*
- ✓ *Acoustic monitoring of speaker-microphone path*
- ✓ *DSP functions: noise reduction, echo cancellation, automatic volume control*
- ✓ *SIP2.0 / SNMPv3*

PUBLIC BUILDINGS GENERAL USE

ICO FRONTIER is a basic intercom type equipped with 1 to 3 programmable buttons used for call functions. It provides high-quality, hands-free voice communication thanks to advanced digital algorithms such as noise reduction, automatic volume control, and echo cancellation. ICO FRONTIER is equipped with 3 relays and 6 GPIO inputs/outputs, which enables easy integration with various external devices, such as strobes, electronic locks, and external buttons. Moreover, ICO FRONTIER can autonomously report its status to building management systems (PSIM, BMS, etc.) using the SNMP protocol, without the need to involve the SIP server. The robust, vandal-resistant housing with an IP54/IK08 rating guarantees reliable operation in various environmental conditions. Dedicated mounting accessories allow for flexible surface, flush, or drywall installation. ICO FRONTIER can be powered via standard PoE or using an external DC power supply.

MODELS	Description
ABT-ICO-FRO-B1E	Intercom equipped with a single programmable buton
ABT-ICO-FRO-B2E	Intercom equipped with two programmable buttons
ABT-ICO-FRO-B3E	Intercom equipped with three programmable buttons

ACCESSORIES	Description
ABT-IAC-BOX01-PB	Mounting box for modular and plasterboard walls
ABT-IAC-BOX01-F	Flush-mounting box
ABT-IAC-BOX01-W	Surface-mounting box

	ICO FRONTIER
Audio	
Loudspeaker	1 × built-in speaker with rated power of 5W
Amplifier	Class D; 15 W @4 Ohm (1% THD+N)
Microphone	1 × MEMS type (frequency response 60 Hz – 20 kHz)
Audio input	1 × balanced line input – nominal level 775 mV RMS
Audio output	1 × balanced line output – nominal level 775 mV RMS
Headphone output	Output power 0,25W, Minimum load impedance 16 Ohm
Codecs	Speex, iLBC, GSM, PCMU, G722, Opus, G729, L16
Indicators and control	
Programmable button	1-to-3
Interfaces	
Ethernet ports	2 × Ethernet port
Relays	2 × make contact input: 30 VDC, 1A / 125 VAC, 0.3A, max. switching voltage 250 VAC / 220 VDC, max. switching power 62.5 VA / 30 W, max. load current 2A
GPIO	6 × digital input/output: parametric input (2-state); logic output 0-5V, current output 18mA, common reference point
LED Driver	12V, current limiting resistor 300 Ohm
Power supply	
PoE	IEEE 802.3af 3af / Class 0, IEEE 802.3at / max. 12.95W (RJ45)
DC	12V / 2A power supply (screw terminal)
Environmental parameters	
Operating Temperature	-40 to +65°C
Relative Humidity	10% to 95% (non-condensation)
Mechanical Resistance	IK08
Dust/water protection	IP54
Physical parameters	
Dimensions (H x W)	137 × 277 mm
Weight	1500 g
Material	Stainless steel

ICO CLEANROOM

IP INTERCOM FOR CLEANROOM APPLICATIONS

- ✓ *Intercom for clean rooms*
- ✓ *Antibacterial protective coating*
- ✓ *Resistance to chemical agents PZH hygiene certificate*
- ✓ *Full backlit keypad OLED display*
- ✓ *DSP functions: noise reduction, echo cancellation, automatic volume control*
- ✓ *SIP2.0 / SNMPv3*

ICO CLEANROOM is an IP intercom dedicated to clean room environments. The device features a housing with an environmental protection rating of IP67 and a front panel secured with a chemical-resistant, antibacterial protective coating, which prevents the accumulation of dirt in crevices and allows the intercom to be cleaned using detergents commonly used in healthcare. The device's properties are confirmed by the Hygiene Certificate of the National Institute of Public Health PZH. ICO CLEANROOM is adapted for installation in modular wall systems. ICO CLEANROOM is equipped with a hands-free system, a clear 2.23-inch OLED display, and a full functional keypad with a backlight option, which improves button visibility in low light conditions and increases contrast in bright light. The keypad allows for adjusting the display backlight and device volume, as well as selecting entries from the contact book in case communication with personnel outside the speed dial list is needed. ICO CLEANROOM has 3 relays and 6 GPIO inputs/outputs, enabling integration with various external devices such as strobe, electronic locks, and specialized buttons. ICO CLEANROOM allows for flush mounting, surface mounting, or installation in modular wall systems. The intercom can be powered via standard PoE or using an external DC power supply.

MODELS	Description
ABT-ICO-CLR	Intercom for clean rooms, with full keypad and protective coating

ACCESSORIES	Description
ABT-IAC-BOX01-PB	Mounting box for modular and plasterboard walls
ABT-IAC-BOX01-F	Flush-mounting box
ABT-IAC-BOX01-W	Surface-mounting box

	ICO CLEANROOM
Audio	
Loudspeaker	1 × built-in speaker with rated power of 5W
Amplifier	Class D; 15 W @4 Ohm (1% THD+N)
Microphone	1 × MEMS type (frequency response 60 Hz – 20 kHz)
Audio input	1 × balanced line input – nominal level 775 mV RMS
Audio output	1 × balanced line output – nominal level 775 mV RMS
Headphone output	Output power 0,25W, Minimum load impedance 16 Ohm
Codecs	Speex, iLBC, GSM, PCMU, G722, Opus, G729, L16
Indicators and control	
LED indicators	3 × RGBW LED (device status, door open, dialing/conversation)
Display	OLED 2,23"
Keyboard	Full function keyboard with backlight
Interfaces	
Ethernet ports	2 × Ethernet port
Relays	2 × make contact input: 30 VDC, 1A / 125 VAC, 0.3A, max. switching voltage 250 VAC / 220 VDC, max. switching power 62.5 VA / 30 W, max. load current 2A 1 × active relay: 12 VDC, max. current 100mA
GPIO	6 × digital input/output: parametric input (2-state); logic output 0-5V, current output 18mA, common reference point
LED Driver	12V, current limiting resistor 300 Ohm
Power supply	
PoE	IEEE 802.3af 3af / Class 0, IEEE 802.3at / max. 12.95W (RJ45)
DC	12V / 2A power supply (screw terminal)
Environmental parameters	
Operating Temperature	-40 to +65°C
Relative Humidity	10% to 95% (non-condensation)
Dust/water protection	IP67
Mechanical Resistance	IK05
Physical parameters	
Dimensions (H × W)	137 × 277 mm
Weight	1500 g
Material	Aluminum

ICO STRONG

IP INTERCOM

- ✓ *Intercom for special applications*
- ✓ *Modular design*
- ✓ *Full backlit keypad*
- ✓ *OLED display*
- ✓ *DSP functions: noise reduction, echo cancellation, automatic volume control*
- ✓ *SIP2.0 / SNMPv3*

ICO STRONG is an intercom dedicated to applications requiring devices with high resistance to external factors. Its housing features vandal resistance at the IP67/IK10 level. ICO STRONG has a modular design. It is standardly equipped with a hands-free system, a 2.23-inch OLED display, and a full functional keypad with a backlight option. It can be further expanded with modules such as a camera, RFID reader, emergency button, or additional speaker. There is also the possibility to replace the full functional keypad with 1 or 4 quick dial buttons. The device has 3 relays and 6 GPIO inputs/outputs, enabling integration with various external devices such as strobe, electronic locks, and specialized buttons. Furthermore, it has the ability to directly transmit information about its status to management systems (PSIM, BMS, etc.) bypassing the SIP server, using the SNMP protocol. ICO STRONG can be surface-mounted or flush-mounted (using dedicated mounting accessories). The device is powered via PoE or using an external DC power supply.

MODELS	Description
ABT-ICO-STR-K	Intercom with 2 speakers, display and keypad
ABT-ICO-STR-KC	Intercom with 1 speaker, IP camera, display and keypad
ABT-ICO-STR-B1	Intercom with 2 speakers, display and 1 button
ABT-ICO-STR-B1C	Intercom with 1 speaker, IP camera, display and 1 button
ABT-ICO-STR-B4	Intercom with 2 speakers, display and 4 buttons
ABT-ICO-STR-B4C	Intercom with 1 speaker, IP camera, display and 4 buttons

ACCESORIES	Description
ABT-IAC-BOX02-W	Mounting box for modular and plasterboard walls
ABT-IAC-BOX02-PB	Flush-mounting box
ABT-IAC-BOX02-F	Surface-mounting box

	ICO STRONG
Audio	
Loudspeaker	1 × built-in speaker with rated power of 5W
Amplifier	Class D; 15 W @4 Ohm (1% THD+N)
Microphone	1 × MEMS type (frequency response 60 Hz – 20 kHz)
Audio input	1 × balanced line input – nominal level 775 mV RMS
Audio output	1 × balanced line output – nominal level 775 mV RMS
Headphone output	Output power 0,25W, Minimum load impedance 16 Ohm
Codecs	Speex, iLBC, GSM, PCMU, G722, Opus, G729, L16
Indicators and control	
LED indicators	3 × RGBW LED (device status, door open, dialing/conversation)
Display	OLED 2,23"
Keyboard	Full function keyboard with backlight
Interfaces	
Ethernet ports	2 × Ethernet port
Relays	2 × make contact input: 30 VDC, 1A / 125 VAC, 0.3A, max. switching voltage 250 VAC / 220 VDC, max. switching power 62.5 VA / 30 W, max. load current 2A 1x active relay: 12 VDC, max. current 100mA
GPIO	6 × digital input/output: parametric input (2-state); logic output 0-5V, current output 18mA, common reference point
LED Driver	12V, current limiting resistor 300 Ohm
Power supply	
PoE	IEEE 802.3af 3af / Class 0, IEEE 802.3at / max. 12.95W (RJ45)
DC	12V / 2A power supply (screw terminal)
Environmental parameters	
Operating temperature	-40 to +65°C
Relative Humidity	10% to 95% (non-condensation)
Mechanical Resistance	IK10
Dust/water protection	IP67
Physical parameters	
Dimensions (H × W × D)	250 × 130 × 60 mm
Weight	1500 g
Material	Aluminum

ICO PHP S01/S02

INFO/SOS HELP POINT INTERCOM

- ✓ *Free-standing intercom*
- ✓ *Vandal-resistant design IK10*
- ✓ *Protection rating IP65*
- ✓ *Modular configuration*
- ✓ *DSP functions: noise reduction, echo cancellation, automatic volume control*
- ✓ *SIP2.0 / SNMPv3*

ICO-PHP is a free-standing intercom column serving as an emergency call point. It features a vandal-resistant housing with an IK10/IP65 protection rating. ICO-PHP has a modular design. It consists of a free-standing enclosure equipped with an intercom module and additional elements such as a camera, induction loop amplifier, or network switch. The configuration and mechanics of the column can be customized to meet individual customer needs. The ICO-PHP intercom module is equipped with 3 relays and 6 GPIO inputs/outputs, enabling integration with various external devices such as strobe, electronic locks, and specialized buttons. Furthermore, it has the ability to directly transmit information about its status to management systems (PSIM, BMS, etc.) bypassing the SIP server, using the SNMP protocol.

MODELS	Description
ABT-ICO-PHP S01	Call and emergency point for railway applications
ABT-ICO-PHP S02	INFO/SOS point for emergency and/or information calls

	ICO PHP
Audio	
Loudspeaker	1 × built-in speaker with rated power of 5W
Amplifier	Class D; 15 W @4 Ohm (1% THD+N)
Microphone	1 × MEMS type (frequency response 60 Hz – 20 kHz)
Audio input	1 × balanced line input – nominal level 775 mV RMS
Audio output	1 × balanced line output – nominal level 775 mV RMS
Headphone output	Output power 0,25W, Minimum load impedance 16 Ohm
Codecs	Speex, iLBC, GSM, PCMU, G722, Opus, G729, L16
Interfaces	
Ethernet ports	2 × Ethernet port
Relays	2 × make contact input: 30 VDC, 1A / 125 VAC, 0.3A, max. switching voltage 250 VAC / 220 VDC, max. switching power 62.5 VA / 30 W, max. load current 2A 1 × active relay: 12 VDC, max. current 100mA
GPIO	6 × digital input/output: parametric input (2-state); logic output 0-5V, current output 18mA, common reference point
LED Driver	12V, current limiting resistor 300 Ohm
Power supply	
PoE	IEEE 802.3af 3af / Class 0, IEEE 802.3at / max. 12.95W (RJ45)
DC	12V / 2A power supply (screw terminal)
Environmental parameters	
Operating temperature	-40 to +65°C
Relative Humidity	10% to 95% (non-condensation)
Mechanical Resistance	IK10
Dust/water protection	IP65

ABT-IAC-BOX01-W/W0 / BOX02-W

SURFACE MOUNT HOUSING

✓ *Surface mount housing for IP Intercoms*

MODELS	Description
ABT-IAC-BOX01-W	Surface mount housing for ICO EMERGENCY series devices
ABT-IAC-BOX01-W0	Surface mount housing for ICO EMERGENCY series devices in orange with SOS markings on the side of the housing
ABT-IAC-BOX02-W	Surface mount housing for ICO STRONG series devices

	ABT-IAC-BOX01-W	ABT-IAC-BOX01-W0	ABT-IAC-BOX02-W
Dimensions (WxHxD)	137 x 277 x 46 mm	137 x 277 x 46 mm	1130 x 250 x 61,8 mm
Weight	1538 g	1538 g	900 g
Material	Steel	Steel	Aluminum

ABT-IAC-BOX01-F/PB / BOX02-FPB

RECESSED HOUSING

- ✓ *Flush-mounting housing*
- ✓ *Housing for installation in modular and plasterboard walls*

ABT-IAC-BOX01-PB

MODELS	Description
ABT-IAC-BOX01-F	Flush-mount housing for ICO EMERGENCY family devices
ABT-IAC-BOX01-PB	Plasterboard housing for ICO EMERGENCY family devices
ABT-IAC-BOX02-FPB	Flush-mount and plasterboard housing for ICO STRONG family devices

	ABT-IAC-BOX01-F	ABT-IAC-BOX01-PB	ABT-IAC-BOX02-FPB
Dimensions (WxHxD)	125 x 265 x 40 mm	125 x 265 x 40 mm	130 x 250 x 57,8 mm
Weight	659 g	601 g	500 g
Material	Steel	Steel	Steel

ABT-ICDG-1

SIP PAGING UNIT

- ✓ *Desktop station with handset and gooseneck microphone*
- ✓ *4.3'' main display*
- ✓ *H.264 video codec support*
- ✓ *Two 3.5'' auxiliary displays*
- ✓ *Programmable buttons*
- ✓ *Full functional keypad*
- ✓ *Headset connection possibility*
- ✓ *Built-in Bluetooth module*

ABT-ICDG-1 is an operator console that combines the functionality of an IP phone and a public address desk. It is equipped with a 4.3-inch display, an auxiliary display, a full functional keypad, a block of 32 programmable buttons, a handset for calls, a hands-free system, and a goose-neck microphone. The numeric keypad of the ABT-ICDG-1 allows the operator to select any intercom by entering its assigned number. On the graphic LCD display, the operator can clearly verify the station with which a connection has been established and access additional functions such as settings and the address book. The quick selection button block, located on the right side of the station, offers programming of 32 physical buttons (a total of 96 logical functions across 3 layers). These can be assigned various tasks, such as selecting a recipient, selecting a zone, and activating voice messages from the server memory.

MODELS	Description
ABT-ICDG-1	Operator console / IP intercom with gooseneck microphone
ABT-ICDG-1B	Operator console / IP intercom with gooseneck microphone; enhanced IK rating

	ABT ICDG-1 / ABT ICDG-1B
Audio	
Microphone	1 × directional gooseneck microphone; Frequency response: 20 Hz - 20 kHz; SNR: > 60 dB. @1kHz
Handset	1 × RJ9 handset with cord
Indicators and control	
Main display	1 × LCD color display 4,3'' (480 x 272)
Auxiliary display	2 × LCD color display 3,5'' (320 x 480)
Keyboard	Full functional telephone keyboard 42 × Programmable buttons
Indicators	1 × status LED (red)
Interfaces	
Ethernet ports	2 × Ethernet port
Power supply	
PoE	PoE: IEEE 802.3af / class 0, IEEE 802.3at / max. 9W
DC	External adapter - 5V / 2A (option)
Environmental parameters	
Operating temperature	-10 to +40°C
Relative Humidity	10% to 95% (non-condensation)
Mechanical Resistance	IP30
Dust/water protection	IK07 (ABT-ICDG-1B)
Dimensions	309 × 214 × 187mm (base option 1) 309 × 226 × 167mm (base option 2)

ABT-ICD-1

DESKTOP INTERCOM

- ✓ *Basic desktop Unit with handset*
- ✓ *2.8" display*
- ✓ *Full functional keypad*
- ✓ *Headset connection possibility*

ABT-IDC-1 is a stylish desktop intercom designed for intuitive call handling and convenient voice announcements. Equipped with a clear 2.8-inch display, a functional keypad, a hands-free mode, and a dedicated handset, it ensures comfortable communication. Thanks to the graphic LCD display, the ABT-IDC-1 operator has a clear view of the call status and easy access to additional functions such as the address book and device settings. The intercom enables initiating calls and conducting conversations with any system user, as well as effectively broadcasting voice messages.

MODELS	Description
ABT-ICD-1	Desktop station with display and headset

	ABT-ICD-1
Audio	
Handset	1 × RJ9 handset with cord
Indicators and control	
Display	1 × LCD color display 2,8'' (320 x 240)
Keyboard	Full functional telephone keyboard
Indicators	1 × status LED (red)
Interfaces	
Ethernet ports	2 × Ethernet port
Power supply	
PoE	PoE: IEEE 802.3af / class 0, IEEE 802.3at / max. 9W
DC	External DC adapter - 5V / 0.6A (option)
Environmental parameters	
Operating temperature	0 to +45°C
Relative Humidity	10% to 95% (non-condensation)
Dimensions	169 × 186.3 × 174.5 mm (setup A) 169 × 177.6 × 183.7 mm (setup B) 169 × 115.6 × 212.5 mm (wall mounted)

ICO MAM

INTELLIGENT IP AMPLIFIER

- ✓ *Audio transmission using SIP, UDP, RTP*
- ✓ *20W power amplifier (Class D)*
- ✓ *Noise tracking capability*
- ✓ *Remote status monitoring*
- ✓ *Reporting via SNMP*
- ✓ *Browser-based configuration and management*

ICO-MAM is an IP network amplifier that enables the integration of conventional loudspeakers into an intercom system. It is equipped with a digital amplifier with rated power of 20W (at 4 Ohms). ICO-MAM is capable of receiving audio signals transmitted using SIP 2.0, RTP, and RAW UDP standards. The device also has a local line input. ICO-MAM offers a noise tracking function – the level and characteristics of the emitted sound can be automatically adjusted to the ambient noise level measured by a connected microphone. This improves the intelligibility of the reproduced speech. ICO-MAM has advanced mechanisms for monitoring its operational status, including acoustic control of the correct functioning of the loudspeaker-microphone system. The device status can be reported to external management systems using the SNMP protocol. The configuration of ICO-MAM is done remotely via an intuitive web interface.

MODELS	Description
ABT-ICO-MAM-S01	Network amplifier with noise tracking function

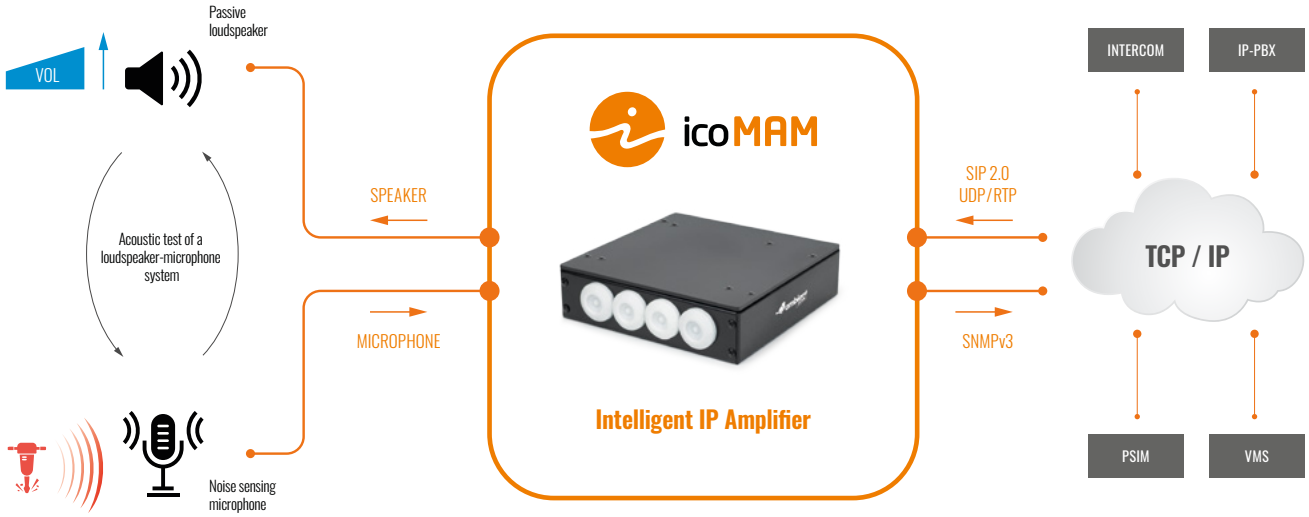

	ICO MAM
Audio	
Amplifier	20W, Class D
Local input	1 × balanced line input, 20 kOhm, nominal level 775 mV RMS
Sensor input	1 × microphone input, 100 kOhm, 2V Phantom Power
Interfaces	
Ethernet ports	2 Ethernet ports
Protocols	SIP2.0, RTP, RAW UDP, SNMP, HTTP
Power supply	
PoE	PoE: IEEE 802.3af / class 0, IEEE 802.3at / max. 12,95W
DC	External DC adapter - 12V / 2A (option)
Environmental parameters	
Operating temperature	-40 to +65°C
Relative Humidity	10% to 95% (non-condensation)
Dust/water protection	IP30
Physical parameters	
Material	Aluminum
Weight	400g
Dimensions (W x H x D)	50 × 140 × 120 mm

ABT-S206S

SIP CEILING LOUDSPEAKER

- ✓ *Powered ceiling loudspeaker*
- ✓ *Quick and simple installation*

The ABT-S206S is a SIP recessed ceiling loudspeaker with built-in amplifier. The loudspeaker can be powered via PoE or using a DC adapter. It is dedicated for security and safety applications, allowing it to interface to intercom systems, PSIM software, VMS, CCTV systems and other, directly via TCP/IP network.

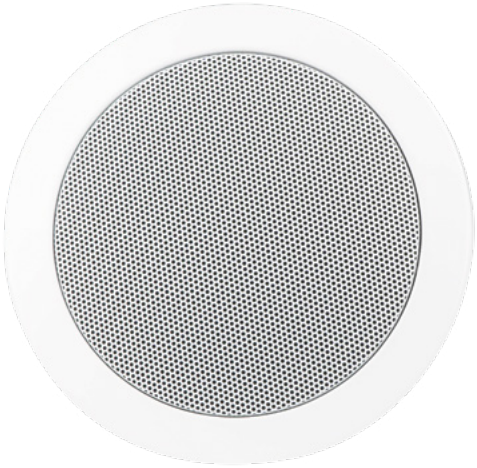

	ABT-S206S
Electrical	
Rated power	6 W
Network interface	10/100BASE-TX, RJ45
Power supply	DC 12 – 24 V or POE
Decoding mode	Max. 48 kHz, 320 kbps audio stream, support MP3, G.711 a/u, G.722. min. delay: 50 ms
Effective frequency range	120 Hz – 20 000 Hz
Dispersion at 1 kHz	180°
SPL (6 W @ 1 m)	99 dB
Environmental	
IP rating	IP32
Min./max. ambient temperature	-20°C / 55°C
Mechanical	
Dimensions	Height 130 mm, ø 204 mm
Net Weight	1,1 kg
Colour	White (RAL 9003)
Material	Steel
Mounting	Spring clamp
Accessories	
Power supply	12 VDC / 2 A / 24 W

Frequency band:

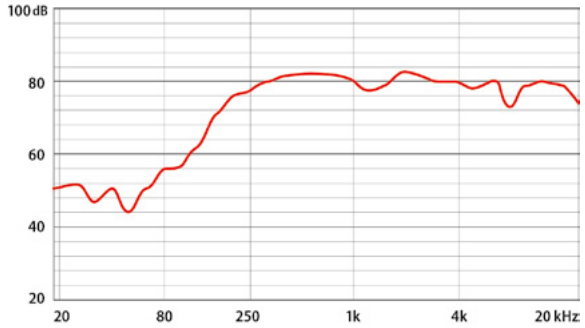

Circular chart of directional characteristic:

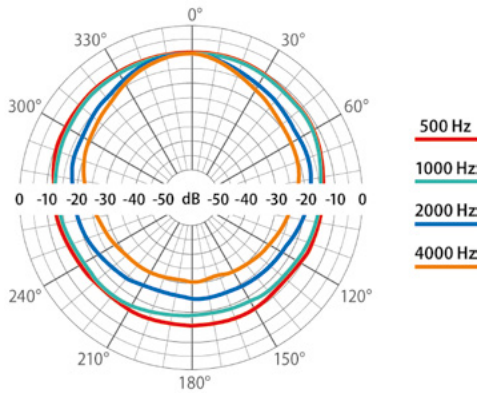

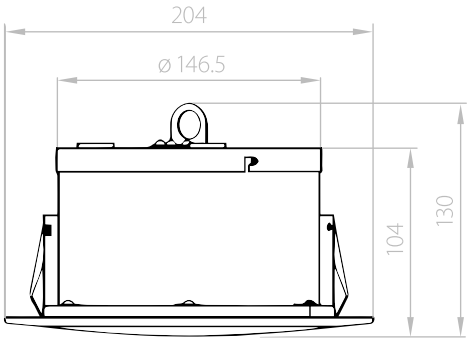

ABT-W6S

SIP WALL-MOUNTED LOUDSPEAKER

- ✓ *Powered cabinet loudspeaker*
- ✓ *Suitable for wall and ceiling installation*

The ABT-W6S is a cabinet loudspeaker with a metal enclosure. The loudspeaker is designer for on-wall and/or on-ceiling installation, with the option for recessed installation (using an accessory bracket). The loudspeaker is fitter with a built-in power amplifier and SIP module, allowing it to interface directly with SIP-based life safety and security systems.

	ABT-W6S
Electrical	
Rated power	6 W
Network interface	10/100BASE-TX, RJ45
Power supply	DC 12 – 24 V or POE
Decoding mode	Max. 48 kHz, 320 kbps audio stream, support MP3, G.711 a/u, G.722. min. delay: 50 ms
Effective frequency range	120 Hz – 20 000 Hz
Dispersion at 1 kHz	180°
SPL (6 W @ 1 m)	101 dB
Environmental	
IP rating	IP32
Min./max. ambient temperature	-20°C / 55°C
Mechanical	
Dimensions	260 × 180 × 80 mm
Net weight	1,5 kg
Colour	White (RAL 9003)
Material	Steel
Mounting	Screw
Accessories	
Power Supply	12 VDC / 2 A / 24 W

Frequency band:

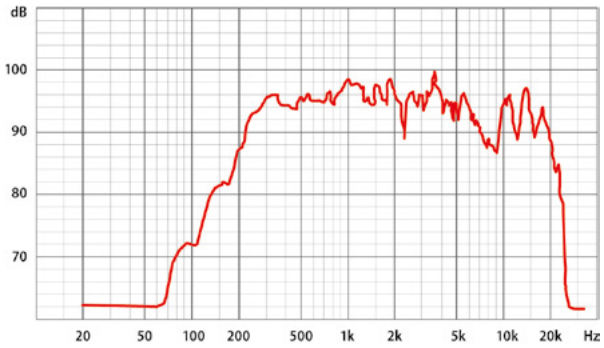

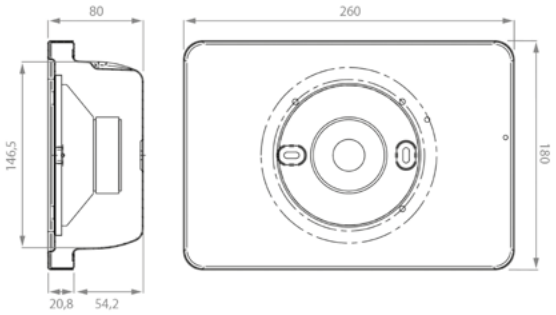

Circular chart of directional characteristic – horizontal:

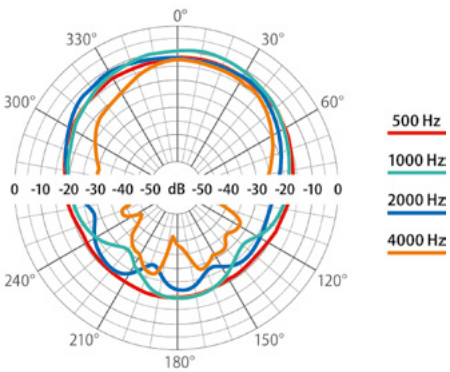

Circular chart of directional characteristic – vertical:

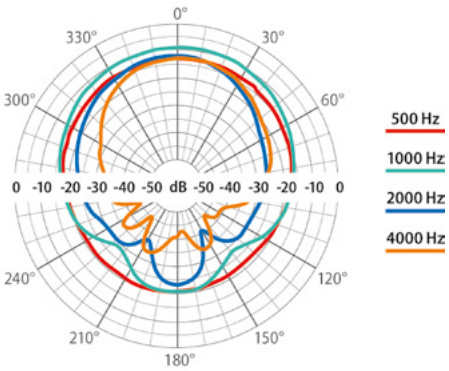

ABT-T2515S

SIP HORN LOUDSPEAKER WITH BUILT-IN 15 W AMPLIFIER

- ✓ *High sound pressure level*
- ✓ *Aluminium housing*
- ✓ *Protection from dust and humidity: IP65 rating*

ABT-T2515S is a SIP horn loudspeaker with a built-in 15 W amplifier. It can be powered by PoE that allows to easily connect it to existing local area networks using one CAT5 / CAT6 cable connection. It is an ideal choice for applications in security systems, industrial and commercial systems in both outdoor and indoor areas such as train stations, airports, parking lots, parks, gardens, corridors and much more. The high efficiency and directionality of the loudspeaker allow broadcasting voice messages directly to even distant places, while ensuring a high sound pressure level. The aluminium housing guarantees increased resistance to adverse weather conditions provided by the IP65 rating.

	ABT-T2515S
Electrical	
Rated power of amplifier	15 W
Network interface	10/100BASE-TX, RJ45
Power supply	DC 12 – 24 V or POE
Decoding mode	Stereo playing, max. 48 kHz, 320 kbps audio stream, support MP3, WAV (PCM +IMA ADPCM), G.711 a/u, G.722., min. delay: 50 ms
Encoding mode	G.711a/u, G.722 and RTP mode, min. delay: 30 ms
Effective frequency range	350 Hz – 7 kHz
Dispersion at 1 kHz	110°
SPL (15 W @ 1 m)	111 dB
Environmental	
IP rating	IP65
Min./max. ambient temperature	-20°C / 55°C
Mechanical	
Dimensions	250 × 320 mm
Net weight	2,3 kg
Colour	Light grey (RAL 7035)
Material	Aluminium
Mounting	U type bracket
Accessories	
Power Supply	12 VDC / 2 A / 24 W

Frequency band:

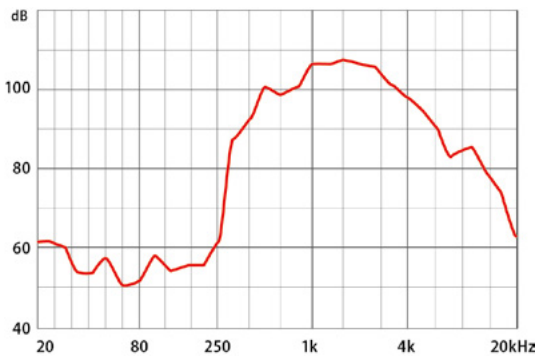

Circular chart of directional characteristic:

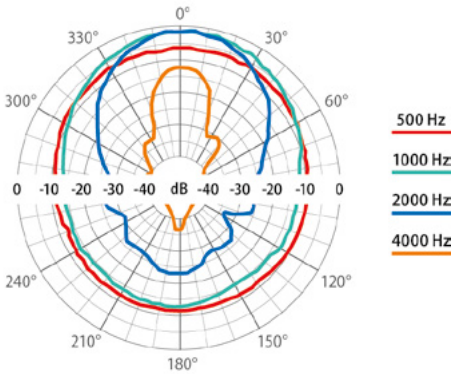

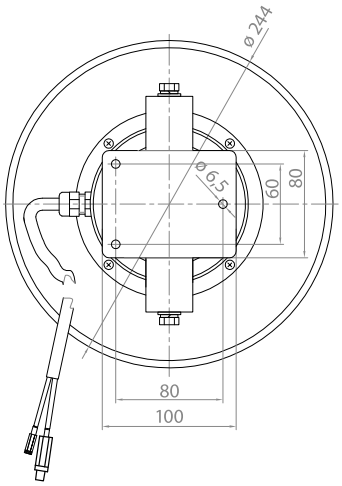

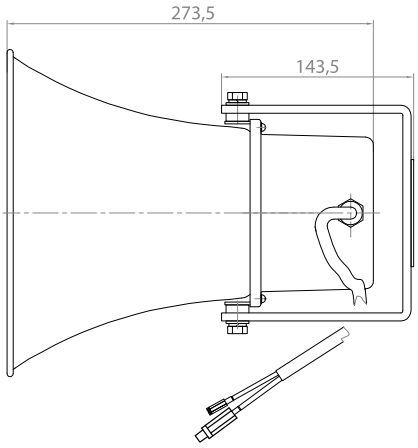

alarms
events
legend
object
technics
YELLOW
Advanced solutio
Build. A
level 2
level 1
level 0
Build. B
level 1
level 0
Build.C
level 2
level 1
level 0
A
4
3
2
1
0
-1

Security System Management Software

- ✓ Activation of virtual and local control inputs in Multives / minives
- ✓ Visualisation of statuses Virtual outputs, Zones, Group zones, System statuses
- ✓ Identification of playing sources in all visualized zones
- ✓ Activation of evacuation mode on the Multives / minives
- ✓ The use of TCP/IP, UDP and RS232 and RS485 interfaces
- ✓ Object-oriented visualization, vector and in web browsers
- ✓ Visualization of many independent systems
- ✓ Automatic presentation of the alarm location
- ✓ Support for up to 8 monitors for 4 operators at the same time
- ✓ Detection of faults and irregularities in integrated systems
- ✓ Logging events such as alarm, operators, system
- ✓ Activation of static matrixes

Yellow

Security System Management Software

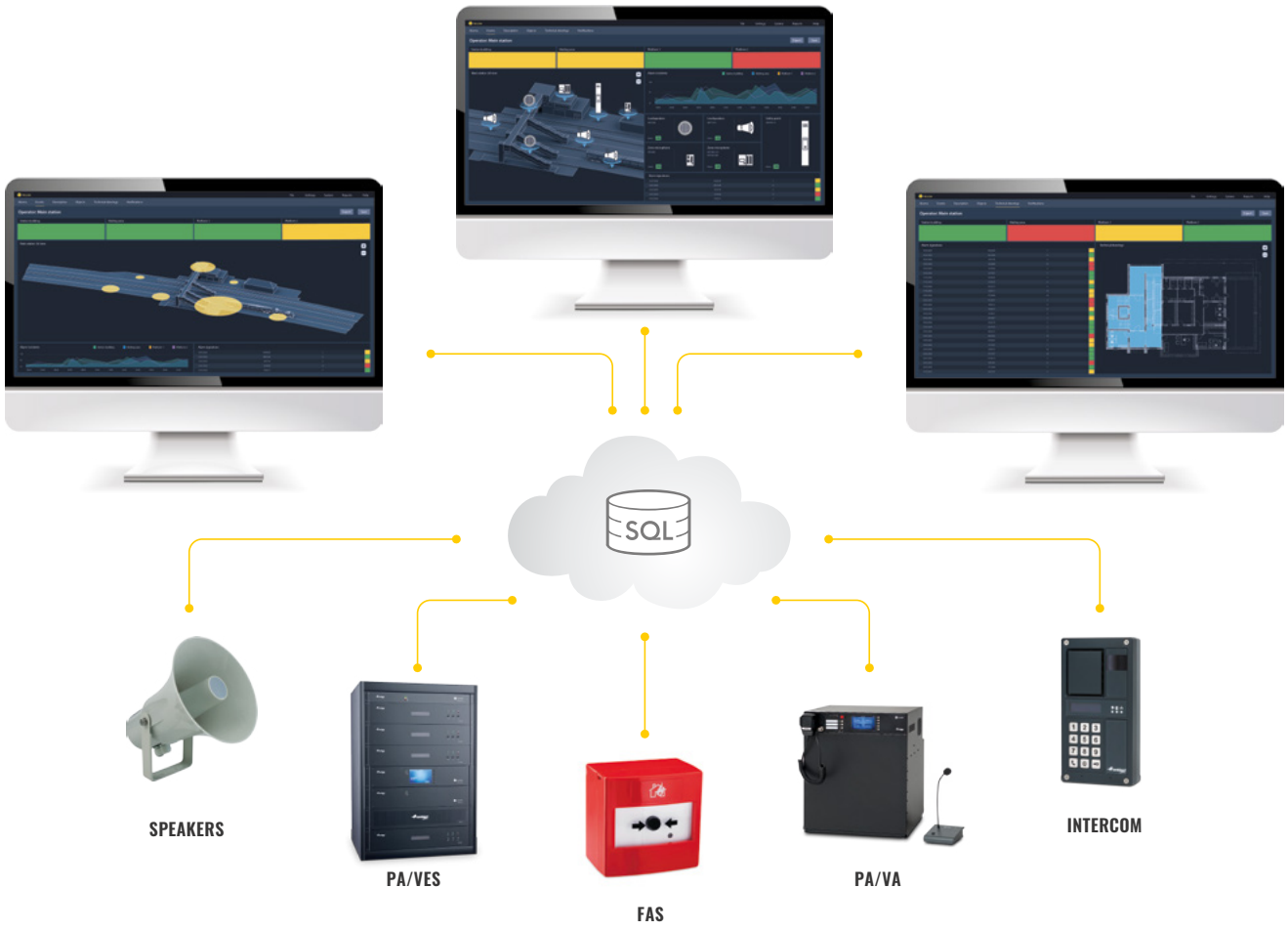

CHARACTERISTICS

- *Activation of virtual and local control inputs in smartVES / midiVES/miniVES systems*
- *Visualisation of statuses Virtual outputs, Zones, Group zones, System statuses*
- *Activation matrixes – dynamically by selecting which source should be played in the selected zone or group of zones*
- *Activation of static matrixes*
- *Activation of evacuation mode on the smartVES/midiVES/ miniVES systems*
- *Identification of playing sources in all visualized zones*
- *Volume control*
- *Visualization of many independent systems and objects*
- *The use of TCP/IP, UDP and RS232 and RS485 interfaces*
- *Automatic presentation of the alarm location*
- *Object-oriented visualization, vector and in web browsers*
- *Support for up to 8 monitors for 4 operators at the same time*
- *Detection of faults and irregularities in integrated systems*
- *Logging events such as alarm, operators, system*
- *SNMP and OPC protocol available*
- *Oracle type databases*

Visualization offered by Yellow is both user-friendly and very rich in functional features. With a comprehensive visualization, you are provided with a dynamic presentation of your devices – both graphic and textual. Visualization is easily adapted to your needs so it keeps its functionality regardless of the nature of the facility. An aesthetic design will help you to create your perfect system for shopping malls, offices, military sites, industrial objects and other.

Visualization can be provided in a form of the classic object technology, vector technology, as well as a WEB browser. For the simplest and most basic form of presentation of your integrated devices put your icons on your pre-defined views (graphic panels) with a simple click. All your icons represent the actual status of the corresponding devices. Yellow also offers a feature called functional block: for example, you can build whole tables with events, a dynamic list of current events, reception modules, etc.

You can also enrich your visualization with special effects, such as semi-transparency and 3D effects. Yellow does not require any special set of skills for day-to-day operations. It's a very user-friendly solution designed to guide you through every process.

Yellow is designed for computer networks with client server structure. This way you can manage the system from multiple locations simultaneously. You can manage multiple buildings either from one place or from many different places at the same time. In case you have to handle a big number of facilities, cluster technology might be your best bet. This way you can set up a local monitoring center on site, as well as the main monitoring center for global control of all your buildings.

Regardless of the location of your devices, the visualisation of events and status is realized on all of the workstations within your network. Likewise, you can conduct all configuration and steering procedures using any computer connected to your network. This way you are more flexible in your work organization.

Database stores all your configuration and events. Any changes are automatically saved and implemented on all other workstations included in your system. Such a solution allows you to work online.

MINIMUM SYSTEM REQUIREMENTS

Processor	min. Intel Core i3
Memory	RAM 8 GB
Hard drive	HDD 200 GB
Network card	100 Mbit/s
Recommended operating system	Windows 10 64bit Professional

Loudspeakers

EN 54-24

Tailored to different solutions

Voice Alarm Loudspeakers

ABT-LA30 / ABT-LA60 105
ABT-LAB 107
ABT-M15 / ABT-M30 / ABT-M50 111
ABT-W6 113
ABT-W6W 115
ABT-SW176 117
ABT-S2030 / ABT-S2030B 119
ABT-S226 121
ABT-S206 123
ABT-S206B 125
ABT-S186 127
ABT-S183 / ABT-S183C 129
ABT-S106 / ABT-S136 131
ABT-S2010 / ABT-S2710 133
ABT-P10BD 135
ABT-P10 / ABT-P10P 137
ABT-P20 / ABT-P20P 139
ABT-T1310 / ABT-T2115 / ABT-T2330 141
ABT-T1410 / ABT-T2015 143
ABT-T1510 / ABT-T2215 / ABT-T2430 / ABT-T2435 145
ABT-HP240EN / ABT-HP120EN 147
ABT-TNL100 149
ABT-OMN100 151

Voice Alarm A/B Loudspeakers

ABT-S226/AB 153
ABT-SW176/AB 155
ABT-W6W/AB 157
ABT-W6/AB 159

Special Application Loudspeakers

ABT-HP200 161
ABT-BS140 / ABT-BS220 163
ABT-S206F 165
ABT-W6F 167
ABT-P20A 169
ABT-T2520A 171
ABT-TNL100-1 173
ETH20MD LOUD 175
ETHY20MD LOUD 177
ETH20MD LOUD 24/48 VDC 179
ETH20MD LOUD 24/48 VDC SPECIAL 181

SIP Loudspeakers

ABT-S206S 183
ABT-W6S 185
ABT-T2515S 187

Public Address Loudspeakers

ABT-W6W/PA 189
ABT-SW176/PA 191
ABT-S186/PA 193
ABT-S206B/PA 195
ABT-PA10/PA / ABT-P10P/PA 197
ABT-P20/PA / ABT-P20P/PA 199
ABT-T1410/PA / ABT-T2015/PA 201
ABT-LA10B/PA / ABT-LA20B/PA / ABT-LA30B/PA / ABT-LA40B/PA 203

Public Address Power Amplifiers

ABT-PA2480AC / ABT-PA4480AC 205

ABT-LA30 / ABT-LA60

EN 54-24

LINE ARRAY LOUDSPEAKERS COLUMNS

- ✓ *Compliance with EN 54-24*
- ✓ *Certificate of Conformity issued by CNBOP: 1438-CPR-0574*
- ✓ *Compliance with BS5839-8 standard (thermal protection)*

ABT-LA fire-alarm loudspeakers mean a new quality among the facilities of the kind. ABT-LA30 and ABT-LA60 units are line-array loudspeaker columns, which means they ensure considerably farther reach than conventional units at simultaneous maintenance of high uniformity of sound level in the area of broadcasting. Being line-array acoustic sources, ABT-LA columns feature a unique high directionality in vertical plane so that the sound they generate will rather go exactly towards the controlled audio-space instead of unwanted areas, such as e.g. ceiling or floor. ABT-LA columns are mostly designed for the rooms with high reverberation time as well as for other places where the quality of speech is reduced due to unfavourable conditions.

The ABT-LA design allows easy mechanical and electrical integration of the two columns into a single consistent unit which becomes a loudspeaker with higher power output and farther reach. It makes a better use of the benefits offered by the line-array source. Variable geometry of the column allows generating two sound beams to be randomly sent at various angles to the two different areas. Sound transfer band of the ABT-LA columns has been designed to achieve the highest possible fidelity of speech signal reproduction and to ensure unchallenged parameters of the quality of speech, all as required by the standards applicable to the Voice Evacuation Systems.

Solid aluminium enclosure, steel assembly jigs, and IP 65 guarantee long-term failure-free operations under any conditions, both in outdoor and indoor environments. The columns are entirely dustproof and resistant to the impact of direct water jet.

ABT-LA60

ABT-LA30

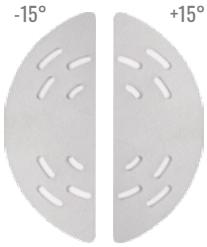

Connect angle:
-15° ÷ +15°

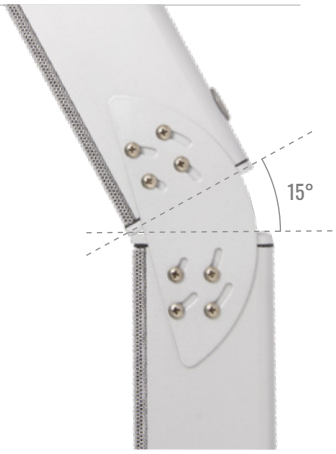

	ABT-LA30	ABT-LA60
Electrical		
Maximum power, W	48	96
Rated power, W	30	60
Tappings 100 V line according to EN 54-24, W	30 / 15 / 7,5 / 3,8	60 / 30 / 15 / 7,5
Tappings 70 V line	15 / 7,5 / 3,8 / 1,9	30 / 15 / 7,5 / 3,8
Transformer impedance @ 100 V, Ω	333,3 / 666,6 / 1333,3 / 2631,5	166,6 / 333,3 / 666,6 / 1333,3
Driver impedance, Ω	12	6
Effective frequency range, Hz	141 – 20 000	136 – 20 000
Sensitivity @ 4 m, 1 W, dB	77	79
SPL @ 4m, rated power, dB	90	94
SPL @ 1 m, 1 W, dB, test signal bandwidth 300 Hz – 6 kHz*	93	95
SPL @ 1 m, rated power, db, test signal bandwidth 300 Hz – 6 kHz*	105	109
Horizontal dispersion at 500 Hz / 1 kHz / 2 kHz / 4 kHz, [°]	360 / 220 / 185 / 120	360 / 215 / 185 / 115
Vertical dispersion at 500 Hz / 1 kHz / 2 kHz / 4 kHz, [°]	250 / 75 / 35 / 15	95 / 35 / 15 / 5
Environmental		
Environmental type / IP rating according to EN 54-24	B / IP33C	B / IP33C
IP rating**	65	65
Min. / max. ambient temperature	-25°C / 70°C	-25°C / 70°C
Mechanical		
Dimensions H × W × D, mm	510 × 80 × 110	870 × 80 × 110
Net weight, kg	3,1	4,9
Colour	Silver (RAL 9006)	Silver (RAL 9006)
Enclosure material	Aluminium	Aluminium
Option		
For DC line monitoring	Capacitor	Capacitor
Colour optional	RAL palette	RAL palette
Ease Model	✓	✓

* calculated from line-array far field measurement at 8 m

** parameters not confirmed by CNBOP-PIB

ABT-LA30

Frequency band:

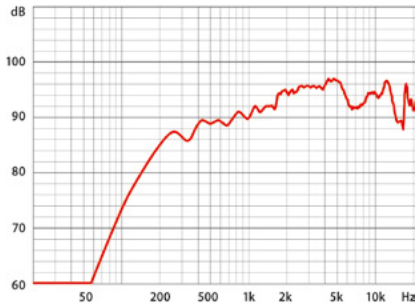

Circular chart of directional characteristic – horizontal:

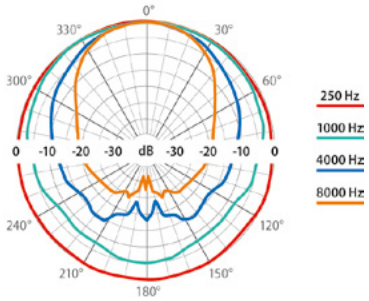

Circular chart of directional characteristic – vertical:

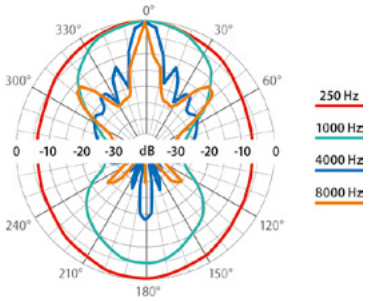

ABT-LA60

Frequency band:

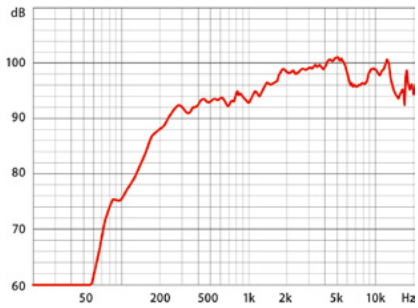

Circular chart of directional characteristic – horizontal:

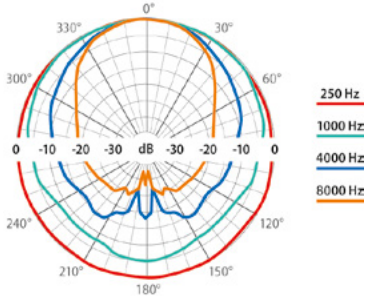

Circular chart of directional characteristic – vertical:

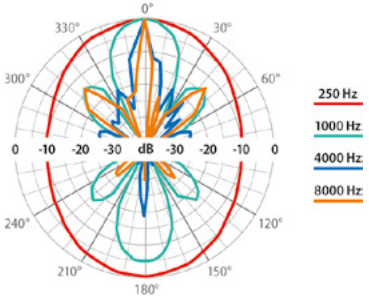

ABT-LA10B/ABT-LA20B
ABT-LA30B/ABT-LA40B
ABT-LA50B/ABT-LA60B
ABT-LA80B/ABT-LA100B

EN 54-24

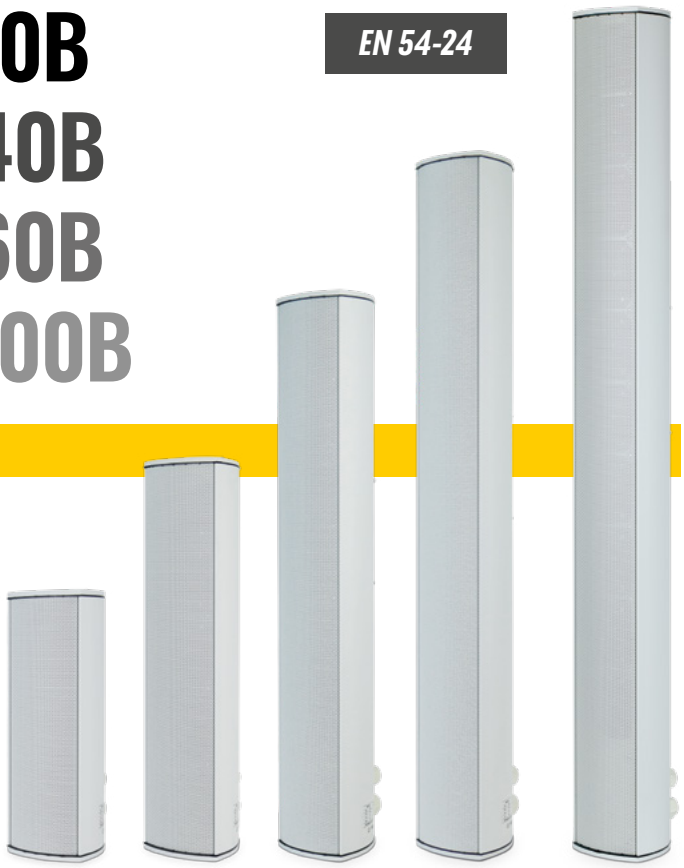

LOUDSPEAKERS COLUMNS

- ✓ *Compliance with EN 54-24*
- ✓ *Certificate of Conformity issued by CNBOP: 1438-CPR-1014*
- ✓ *Compliance with BS5839-8 standard (thermal protection)*

ABT-LA10B, ABT-LA20B, ABT-LA30B, ABT-LA40B, ABT-LA50B, ABT-LA60B, ABT-LA80B, ABT-LA100B loudspeakers are Type B loudspeakers.

They provide much further coverage while maintaining high sound level uniformity in the publicized area. ABT-LAB loudspeakers are characterized by high directivity, so the sound emitted by the loudspeaker is directed precisely to the listening area and not to undesired areas, such as the ceiling or floor. ABT-LAB are dedicated primarily for rooms with long reverberation times and unfavorable acoustic conditions for speech intelligibility.
The frequency response of ABT-LAB speakers has been designed for most accurate reproduction of the speech signal, to provide the highest speech intelligibility required in PAVA systems.

They are aslo perfectly suited for music broadcasting. Robust aluminum housing that provides the degree of protection to environmental parameters IP65 and mechanical impact IK07 guarantees long, trouble-free operation in all conditions

CHARACTERISTICS

- » ***Easy and quick installation***
- » ***High sound quality of both speech and music***
- » ***Highest level of speech intelligibility***
- » ***Ideal for mounting on a ceiling, wall or pole.***
- » ***Two cable inputs insulated with glands***
- » ***Weatherproof housing IP65***
- » ***For indoor and outdoor applications***

	ABT-LA10B	ABT-LA20B	ABT-LA30B	ABT-LA40B
Electrical				
Rated power, W	10	20	30	40
Tappings 100 V line, W	10 / 5 / 2,5	20 / 10 / 5	30 / 15 / 7,5	40 / 20 / 10
Tappings 70 V line, W	5 / 2,5 / 1,25	10 / 5 / 2,5	15 / 7,5 / 3,75	20 / 10 / 2005
Transformer impedance @ 100 V, Ω	1000 / 2000 / 4000	500 / 1000 / 2000	333 / 667 / 1333	250 / 500 / 1000
Driver impedance, Ω	8	4	10	8
Effective frequency range, Hz	160 – 20000	160 – 20000	160 – 20000	160 – 20000
Sensitivity @ 4 m, 1 W, dB	71	74	76	77
SPL @ 4 m, Rated power, dB	82	87	90	92
SPL @ 1 m, 1 W, dB	83	89	88	89
SPL @ 1 m, Rated power, dB	94	99	102	104
Horizontal dispersion at 500 Hz / 1 kHz / 2 kHz / 4 kHz, [°]	360 / 210 / 150 / 110	360 / 200 / 155 / 120	360 / 200 / 155 / 115	360 / 200 / 155 / 120
Vertical dispersion at 500 Hz / 1 kHz / 2 kHz / 4 kHz, [°]	360 / 130 / 80 / 40	145 / 80 / 35 / 20	110 / 60 / 30 / 15	85 / 40 / 20 / 10
Environmental				
Environmental type	Type B			
IP rating	IP65			
Min. / max. ambient temperature	-25°C / 55°C			
Mechanical				
Dimensions, mm	95 × 268 × 100	95 × 418 × 100	95 × 588 × 100	95 × 738 × 100
Weight, kg	2 kg	3 kg	4,2 kg	5,3 kg
Color	Light gray (RAL 7035)			
Material	Aluminium			
Impact Protection	IK07			
Mounting	Mounting bracket			
Options				
For DC line monitoring	Capacitor			
Color variants	RAL palette			
EASE Model	✓	✓	✓	✓

	ABT-LA50B	ABT-LA60B	ABT-LA80B	ABT-LA100B
Electrical				
Rated power, W	50	60	80	100
Tappings 100 V line, W	50 / 25 / 12,5	60 / 30 / 15	80 / 40 / 20	100 / 50 / 25
Tappings 70 V line, W	25 / 12,5 / 6,25	30 / 15 / 7,5	40 / 20 / 10	50 / 25 / 12,5
Transformer impedance @ 100 V, Ω	200 / 400 / 800	167 / 333 / 667	125 / 250 / 500	100 / 200 / 400
Driver impedance, Ω	6	6	6	6
Effective frequency range, Hz	160 – 20000	160 – 20000	160 – 20000	160 – 20000
Sensitivity @ 4 m, 1 W, dB	78	77	76	75
SPL @ 4 m, Rated power, dB	94	94	94	94
SPL @ 1 m, 1 W, dB	90	89	88	87
SPL @ 1 m, Rated power, dB	106	106	106	106
Horizontal dispersion at 500 Hz / 1 kHz / 2 kHz / 4 kHz, [°]	360 / 200 / 165 / 125	360 / 200 / 165 / 125	360 / 200 / 165 / 125	360 / 200 / 165 / 125
Vertical dispersion at 500 Hz / 1 kHz / 2 kHz / 4 kHz, [°]	70 / 35 / 15 / 10	70 / 35 / 15 / 10	70 / 35 / 15 / 10	70 / 35 / 15 / 10
Environmental				
Environmental type	Type B			
IP rating	IP65			
Min. / max. ambient temperature	-25°C / 55°C			
Mechanical				
Dimensions, mm	95 × 888 × 100	95 × 888 × 100	95 × 888 × 100	95 × 888 × 100
Weight, kg	6 kg			
Color	Light gray (RAL 7035)			
Material	Aluminium			
Impact Protection	IK07			
Mounting	Mounting bracket			
Options				
For DC line monitoring	Capacitor			
Color variants	RAL palette			
EASE Model	✓	✓	✓	✓

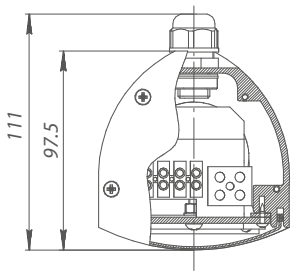
111
97.5

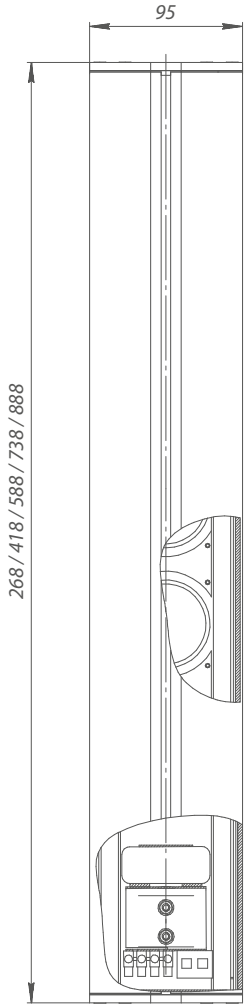
95
268 / 418 / 588 / 738 / 888

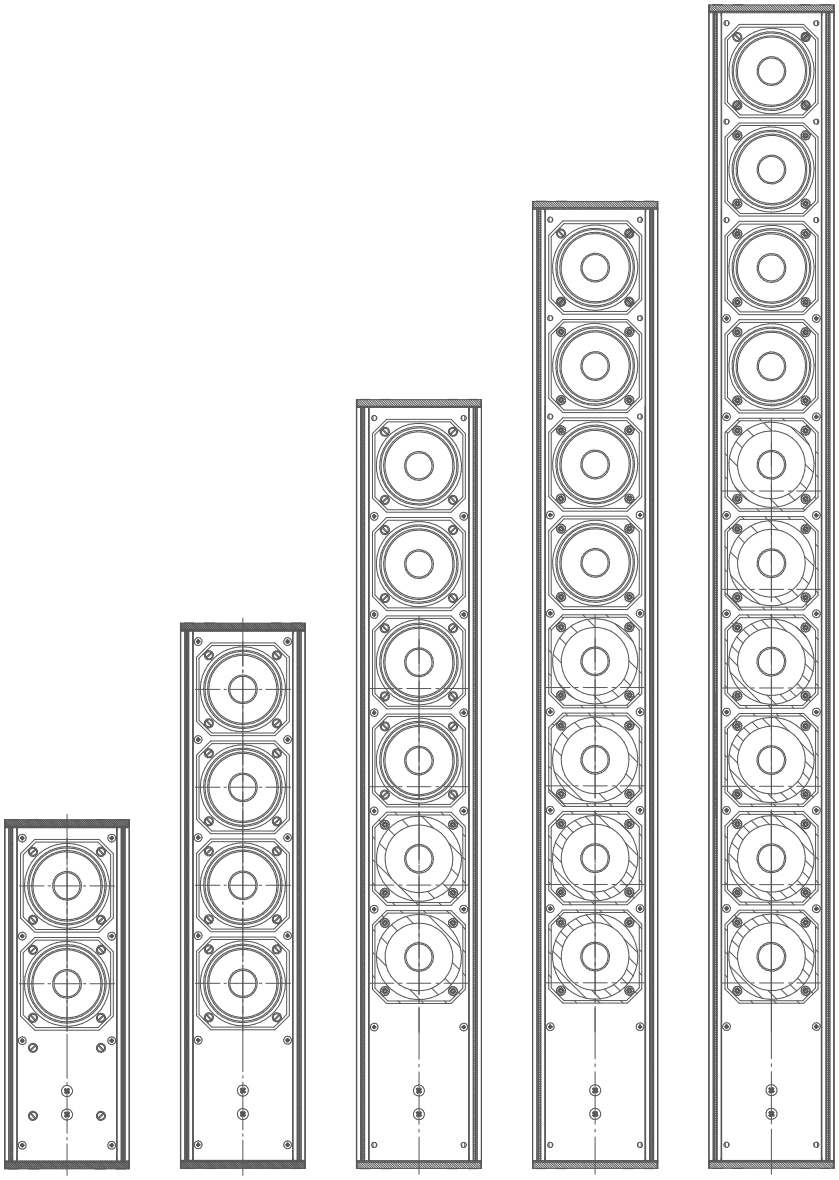

ABT-M15 / M30 / M50

EN 54-24

2-WAY WALL MOUNTED MONITOR SPEAKER

- ✓ *Compliance with EN 54-24*
- ✓ *Certificate of Conformity issued by CNBOP: 1438-CPR-1030*
- ✓ *Compliance with BS5839-8 standard (thermal protection)*

ABT-M15, ABT-M30, and ABT-M50 are two-way wall-mounted speaker monitors with power ratings of 15W, 30W, and 50W. They are designed for use in evacuation systems compliant with the EN54 standard, providing excellent sound quality and meeting safety requirements. These speakers offer high sensitivity and a wide frequency range, ensuring clear and intelligible voice communication.

Each speaker is equipped with a 100V line transformer with four power settings and can also operate at low impedance. The housing made of high-quality ABS guarantees long-lasting durability and an aesthetic appearance. The high protection class of IP 65 ensures resistance to dust and splashes, allowing for installation both indoors and outdoors.

With their elegant appearance and ease of installation, they are ideal for use in galleries, restaurants, schools, hotels, hospitals, and other public spaces.

CHARACTERISTICS

- » ***High Sound Quality: Two-way design provides full and clear sound.***
- » ***Application Flexibility: Available in 15W, 30W, and 50W versions.***
- » ***Robust Construction: Made from high-quality materials ensuring durability.***
- » ***Environmental Resistance: High protection class IP 65.***
- » ***Aesthetic: Elegant appearance suitable for various interiors.***

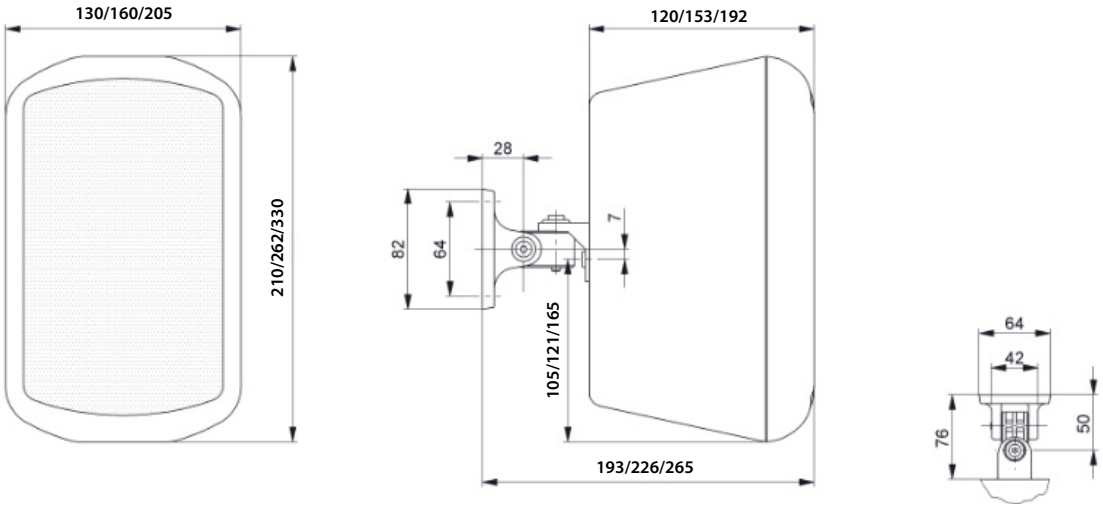

	ABT-M15	ABT-M30	ABT-M50
Electrical			
Rated power, W	15	30	50
Tappings 100 V line according to EN 54-24, W	15 / 7,5 / 3,75 / 1,8	30 / 15 / 7,5 / 3,75	50 / 25 / 12,5 / 6,25
Tappings 70 V line, W	7,5 / 3,75 / 1,8 / 0,9	15 / 7,5 / 3,75 / 1,87	25 / 12,5 / 6,25 / 3,125
Transformer impedance @ 100 V, Ω	667 / 1333 / 2666 / 5555	333 / 667 / 1333 / 4000	200 / 400 / 800 / 1600
Driver impedance, Ω	8	8	8
Effective frequency range, Hz	70 – 20000	60 – 20000	50 – 20000
Sensitivity @ 4 m, 1 W, dB	68	70	72
SPL @ 4 m, rated power, dB	81	86	91
SPL @ 1 m, 1 W, dB,	80	82	84
SPL @ 1 m, rated power, dB,	93	98	103
Horizontal dispersion at 500 Hz / 1 kHz / 2 kHz / 4 kHz, [°]	360 / 220 / 135 / 150	360 / 200 / 130 / 120	360 / 200 / 110 / 80
Vertical dispersion at 500 Hz / 1 kHz / 2 kHz / 4 kHz, [°]	360 / 190 / 130 / 165	360 / 160 / 100 / 40	360 / 155 / 120 / 25
Environmental			
Environmental type / IP rating according to EN 54-24		B / IP33C	
IP rating		65	
Min. / max. ambient temperature		-25 °C / 70 °C	
Mechanical			
Dimensions, mm	210 × 130 × 120	262 × 160 × 153	330 × 205 × 192
Net weight, kg	1,75	2,50	3,65
Colour		White / Black	
Material		ABS	
Mounting		Swivel bracket	
Ease Model		✓	

Frequency band:

ABT-M15

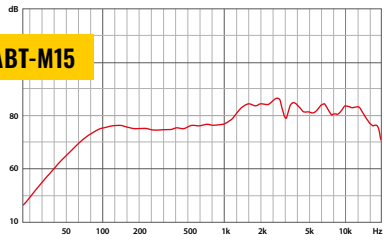

Frequency band:

ABT-M30

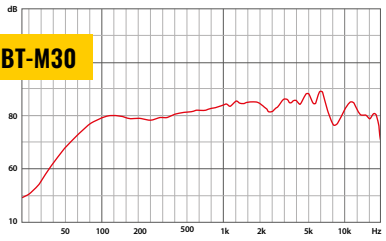

Frequency band:

ABT-M50

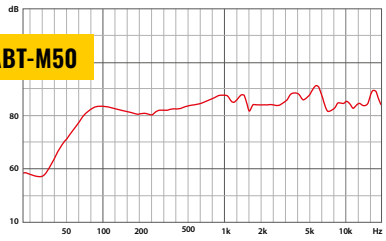

Circular chart of directional characteristic – horizontal:

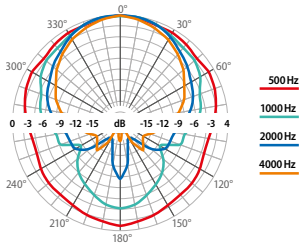

Circular chart of directional characteristic – horizontal:

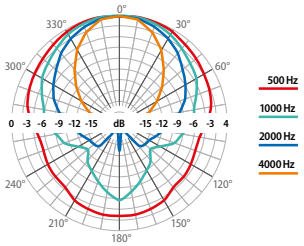

Wykres kołowy charakterystyki kierunkowej – horyzontalny:

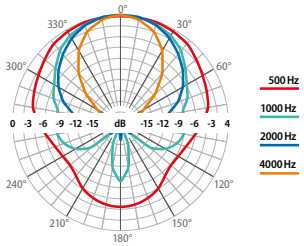

Circular chart of directional characteristic – vertical:

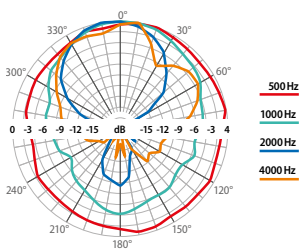

Circular chart of directional characteristic – vertical:

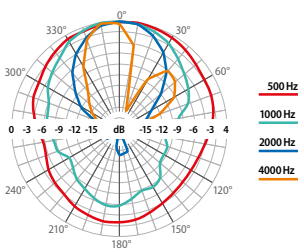

Circular chart of directional characteristic – vertical:

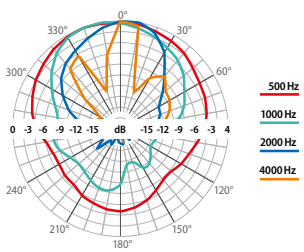

ABT-W6

EN 54-24

WALL-MOUNTED LOUDSPEAKER

- ✓ *Compliance with EN 54-24*
- ✓ *Certificate of Conformity issued by CNBOP: 1438-CPR-0654*
- ✓ *Compliance with BS5839-8 standard (thermal protection)*
- ✓ *Available in white and black*

The ABT-W6 is an elegant multi-function loudspeaker designed to guarantee the highest acoustic parameters. Its solid casing offers an effective protection against acts of vandalism. The loudspeaker can be mounted either on a wall or on a ceiling.

Additionally, the ABT-W6 loudspeaker can be fixed as an recessed speaker and therefore it is an ideal solution for rooms where aesthetic factors play a significant role.

The loudspeaker offers adjustable power regulation through connectivity to applicable transformer tappings thus allowing suitable acoustic pressure (the level of sound) within areas of sound emission adequately to the acoustic conditions existing in those areas.

CHARACTERISTICS

- » ***Easy and quick to mount***
- » ***Modern and elegant design***
- » ***High quality sound of both speech and music***
- » ***Ideal for on-wall or in-wall mounting***

BLACK VERSION

	ABT-W6
Electrical	
Rated power, W	6
Tappings 100 V line according to EN 54-24, W	6 / 3 / 1,5 / 0,75
Tappings 70 V line, W	3 / 1,5 / 0,75 / 0,37
Transformer impedance @ 100 V, Ω	1667 / 3333 / 6667 / 13333
Driver impedance, Ω	8
Effective frequency range, Hz	120 – 20 000
Sensitivity @ 4 m, 1 W, dB	79
SPL @ 4 m, rated power, dB	85
SPL @ 1 m, 1 W, dB, test signal bandwith 300 Hz – 6 kHz	94
SPL @ 1 m, rated power, dB, test signal bandwith 300 Hz – 6 kHz	101
Dispersion at 500 Hz / 1 kHz / 2 kHz / 4 kHz, [°]	180 / 180 / 163 / 80
Environmental	
Environmental type / IP rating according to EN 54-24	A / IP21C
IP rating	32
Min. / max. ambient temperature	-10°C / 55°C
Mechanical	
Dimensions, mm	260 × 180 × 80
Net weight, kg	1,75
Colour	White (RAL 9003) / Black (RAL 9011)
Material	Steel
Mounting	Screw
Option	
For DC line monitoring	Capacitor (ABT-W6C)
Colour optional	RAL palette
Ease Model	✓

Frequency band:

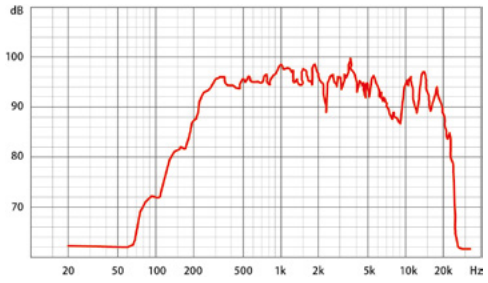

Circular chart of directional characteristic – horizontal:

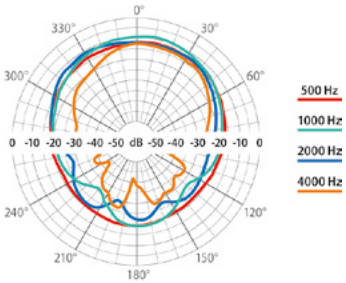

Circular chart of directional characteristic – vertical:

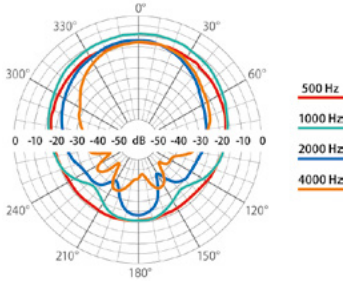

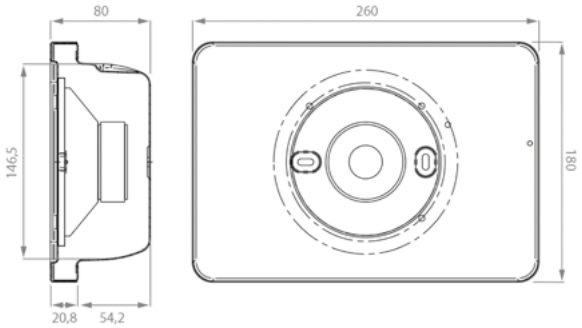

ABT-W6W

EN 54-24

WALL-MOUNTED LOUDSPEAKER

- ✓ *Compliance with EN 54-24*
- ✓ *Certificate of Conformity: 1438-CPR-0699*
- ✓ *Compliance with BS5839-8 standard (thermal protection)*

The ABT-W6W is an elegant multi-function loudspeaker designed to guarantee the highest acoustic parameters. The loudspeaker can be mounted either on a wall or on a ceiling.

Our loudspeakers are perfect on any circulation routes and in staircases located in shopping centres, offices, schools, hotels, hospitals, and industrial buildings. The loudspeaker mingles well with any interior and is virtually invisible thanks to its small dimensions and neat white finish. The loudspeaker offers adjustable power regulation through connectivity to applicable transformer tappings thus allowing suitable acoustic pressure (the level of sound) within areas of sound emission adequately to the acoustic conditions existing in those areas.

To be quite sure our loudspeakers comply with the highest quality standards we test them thoroughly following the most meticulous procedures that warrant excellent parameters of sound emission, safety, and reliability. They are also recommended for use in any and all public address systems.

CHARACTERISTICS

- » ***Easy and quick to mount***
- » ***Modern and elegant design***
- » ***High quality sound of both speech and music***
- » ***Ideal for wall installation***
- » ***6 W transformer with multiple branches ensuring accurate selection of output power***

	ABT-W6W
Electrical	
Rated power, W	6
Tappings 100 V line according to EN 54-24, W	6 / 3 / 1,5 / 0,75
Tappings 70 V line, W	3 / 1,5 / 0,75 / 0,37
Transformer impedance @ 100 V, Ω	1667 / 3333 / 6667 / 13333
Driver impedance, Ω	8
Effective frequency range, Hz	130 – 20 000
Sensitivity @ 4 m, 1 W, dB	78
SPL @ 4 m, rated power, dB	84
SPL @ 1 m, 1 W, dB, test signal bandwith 300 Hz – 6 kHz	90
SPL @ 1 m, rated power, dB, test signal bandwith 300 Hz – 6 kHz	96
Horizontal dispersion at 500 Hz / 1 kHz / 2 kHz / 4 kHz, [°]	320 / 160 / 95 / 70
Vertical dispersion at 500 Hz / 1 kHz / 2 kHz / 4 kHz, [°]	290 / 140 / 100 / 70
Environmental	
Environmental type / IP rating according to EN 54-24	A / IP21C
IP rating	32
Min. / max. ambient temperature	-10°C / 55°C
Mechanical	
Dimensions, mm	254 × 196 × 78
Net weight, kg	1,8
Colour	White (RAL 9003)
Material	MDF
Mounting	Screw
Option	
For DC line monitoring	Capacitor (ABT-W6WC)
Ease Model	✓

Frequency band:

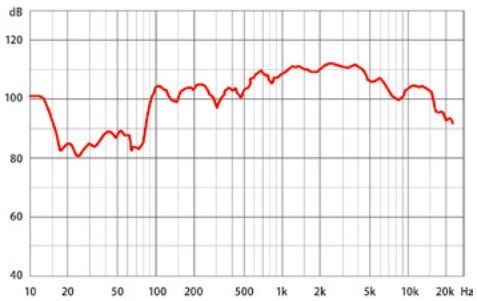

Circular chart of directional characteristic – horizontal:

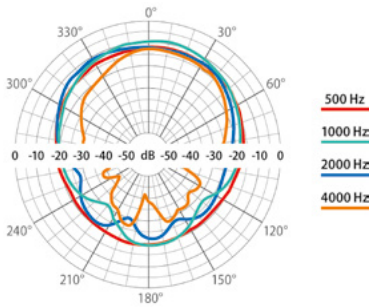

Circular chart of directional characteristic – vertical:

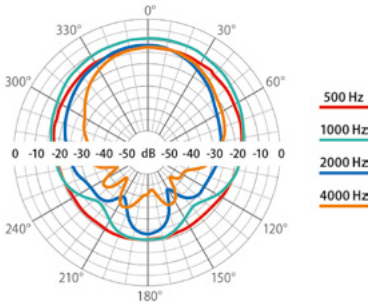

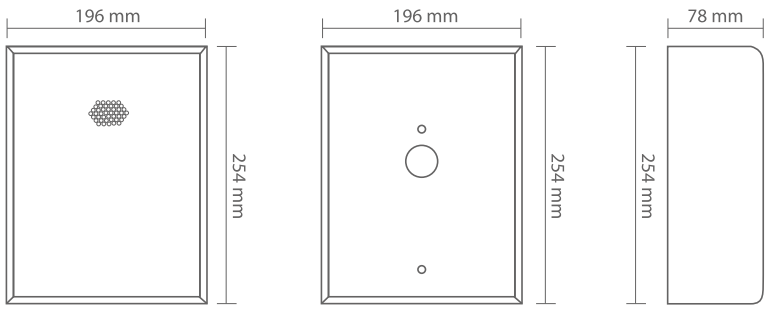

ABT-SW176

EN 54-24

SURFACE MOUNTED LOUDSPEAKER

- ✓ *Compliance with EN 54-24*
- ✓ *Certificate of Conformity: 1438-CPR-0738*
- ✓ *Compliance with BS5839-8 standard (thermal protection)*
- ✓ *Available in white and black*

The ABT-SW176 is an elegant multi-function loudspeaker designed to guarantee the highest acoustic parameters. The loudspeaker can be mounted either on a wall or on a ceiling.

Our loudspeakers are perfect on any circulation routes and in staircases located in shopping centres, offices, schools, hotels, hospitals, and industrial buildings.

The loudspeaker mingles well with any interior and is virtually invisible thanks to its small dimensions and neat white finish.

The loudspeaker offers adjustable power regulation through connectivity to applicable transformer tappings thus allowing suitable acoustic pressure (the level of sound) within areas of sound emission adequately to the acoustic conditions existing in those areas.

To be quite sure our loudspeakers comply with the highest quality standards we test them thoroughly following the most meticulous procedures that warrant excellent parameters of sound emission, safety, and reliability. They are also recommended for use in any and all public address systems.

CHARACTERISTICS

- » ***Easy and quick to mount***
- » ***Modern and elegant design***
- » ***High quality sound of both speech and music***
- » ***Ideal for on-wall or on-ceiling mounting***
- » ***6 W transformer with multiple branches ensuring accurate selection of output power***

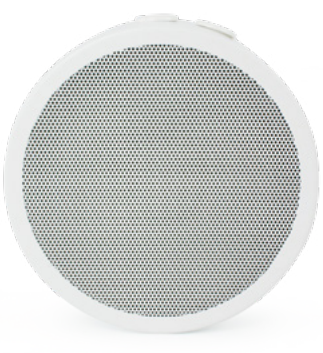

	ABT-SW176
Electrical	
Rated power, W	6
Tappings 100 V line according to EN 54-24, W	6 / 3 / 1,5 / 0,75
Tappings 70 V line, W	3 / 1,5 / 0,75 / 0,37
Transformer impedance @ 100 V, Ω	1667 / 3333 / 6667 / 13333
Driver impedance, Ω	8
Effective frequency range, Hz	130 – 20 000
Sensitivity @ 4 m, 1 W, dB	79
SPL @ 4 m, rated power, dB	85
SPL @ 1 m, 1 W, dB, test signal bandwith 300 Hz – 6 kHz	91
SPL @ 1 m, rated power, dB, test signal bandwith 300 Hz – 6 kHz	97
Dispersion at 500 Hz / 1 kHz / 2 kHz / 4 kHz, [°]	180 / 180 / 90 / 65
Environmental	
Environmental type / IP Rating according to EN 54-24	A / IP21C
IP Rating	32
Min. / max. ambient temperature	-10°C / 55°C
Mechanical	
Dimensions, mm	Height 80, ø 170
Net weight, kg	1,2
Colour	White (RAL 9003) / Black (RAL 9011)
Material	Steel
Mounting	Screw
Option	
For DC line monitoring	Capacitor (ABT-SW176C)
Colour optional	RAL palette
Ease Model	✓

Frequency band:

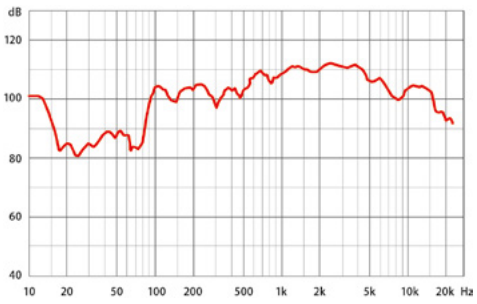

Circular chart of directional characteristic:

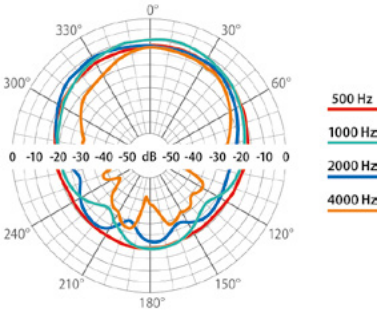

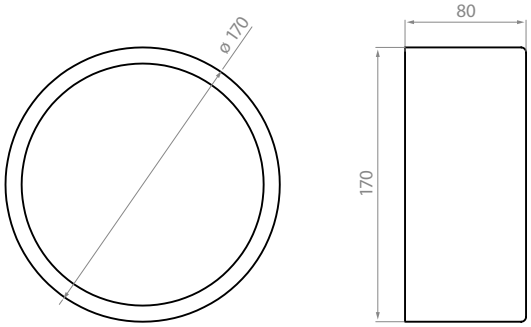

ABT-S2030 / S2030B

TWO-WAY CEILING SPEAKERS

- ✓ *Full compliance with EN 54-24 Standards*
- ✓ *Certificate of Conformity: 1438-CPR-XXXX*
- ✓ *Compliance with BS5839-8 standard (thermal protection)*

ABT-S2030 and ABT-S2030B are 30W two-way ceiling speakers designed for installation in Voice Alarm Systems, providing excellent sound quality while meeting fire safety requirements. Utilizing two-way technology, these speakers offer a wide frequency response, allowing for faithful reproduction of both low and high frequencies. The construction of the speakers is made from materials resistant to high temperatures, ensuring the continuity of the speaker line is protected against interruption or short-circuiting in fire conditions.

The speakers are characterized by high sensitivity, which allows for effective coverage of large areas with sound while consuming minimal energy. Easy installation in suspended ceilings and an aesthetic appearance make them a perfect fit for various interiors without disrupting their design. The product complies with EN 54-24 standards, ensuring its reliability and safety.

CHARACTERISTICS

- » ***High Sound Quality: Two-way design ensures excellent sound quality.***
- » ***Fire Safety: Complies with EN 54-24 fire safety standards.***
- » ***Ease of Installation: Simple installation in suspended ceilings.***
- » ***Aesthetics: Discreet appearance that fits any interior***
- » ***100% protection of line from breaks and short-circuits***

	ABT-S2030	ABT-S2030B
Electrical		
Rated power, W	30	30
Tappings 100 V line according to EN 54-24, W	30 / 20 / 15 / 10	30 / 20 / 15 / 10
Tappings 70 V line, W	15 / 10 / 7,5 / 5	15 / 10 / 7,5 / 5
Transformer impedance @ 100 V, Ω	333 / 500 / 666 / 1000	333 / 500 / 666 / 1000
Driver impedance, Ω	4	8
Effective frequency range, Hz	70 - 20000	80 - 20000
Sensitivity @ 4 m, 1 W, dB	76	79
SPL @ 4 m, rated power, dB	90	93
SPL @ 1 m, 1 W, dB, test signal bandwidth 300 Hz – 6 kHz	88	91
SPL @ 1 m, rated power, dB, test signal bandwidth 300 Hz – 6 kHz	102	105
Dispersion at 500 Hz / 1 kHz / 2 kHz / 4 kHz, [°]	180 / 180 / 160 / 85	180 / 180 / 160 / 85
Environmental		
Environmental type / IP rating according to EN 54-24	A / IP21C	A / IP21C
IP rating	32C	32C
Min. / max. ambient temperature	-10°C / 55°C	-10°C / 55°C
Mechanical		
Dimensions, mm	Height 130, ø204	Height 130, ø204
Net weight, kg	1,95	2,05
Colour	White (RAL 9003)	White (RAL 9003)
Material	Steel	Steel
Mounting	Spring clamp	Spring clamp
Cut-out, mm	ø 170	ø 170
Option		
For DC line monitoring	Capacitor (ABT-S2030C / ABT-S2030BC)	
Colour optional	RAL palette	RAL palette

Frequency band:

ABT-S2030

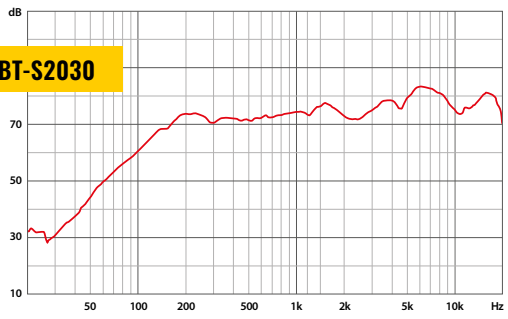

Circular chart of directional characteristic:

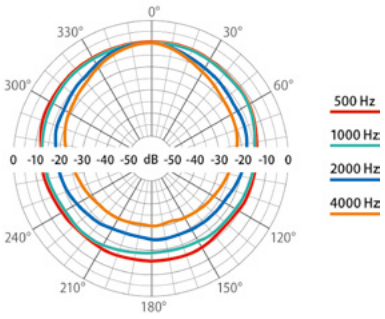

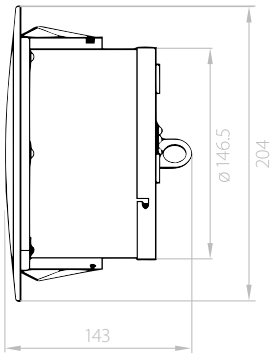

Frequency band:

ABT-S2030B

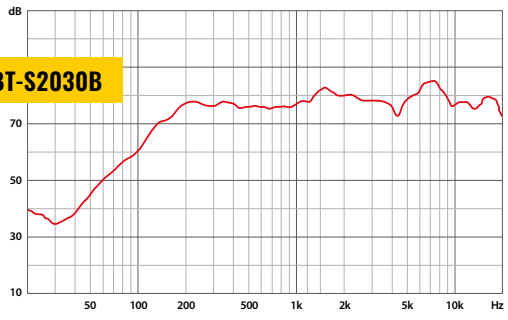

Circular chart of directional characteristic:

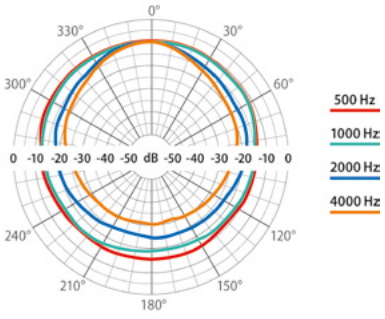

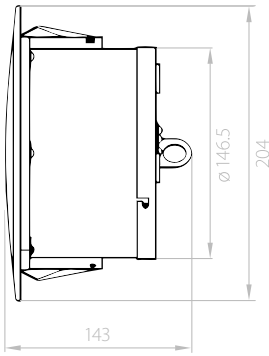

ABT-S226

EN 54-24

CEILING-MOUNTED LOUDSPEAKERS

- ✓ *Full compliance with EN 54-24 Standard*
- ✓ *Certificate of Conformity: 1438-CPR-0898*
- ✓ *Compliance with BS5839-8 standard (thermal protection)*

NEW!

Ceiling mounted fire alarm ABT-S226 loudspeaker is designed for operations at high acoustic levels and the highest reduction in power supply. Actual wide band high efficiency ensures the best understanding of verbal messages. Its parameters have been carefully selected to comply with suspended ceiling applications, both at standard and considerably elevated ceiling-to-floor distance.

Quality standards and audio characteristics have been confirmed through tests and trials in an anechoic chamber, resistance and integrity testing equipment, as well as chambers for resistance to weather and air humidity testing.

The ABT-S206B loudspeaker ensure a balanced sound which is extremely important in emission of highly understandable speech.

The ABT-S206B loudspeaker is noticeable thanks to its elegant looks. The loudspeaker part which becomes visible after the installation is covered by a common and aesthetic white paint coat (RAL 9003) – optionally available other colours (RAL palette).

ABT-S226 is equipped with a standardized fire dome made of soft steel and supplied with two cable penetrations with rubber glands. Special jig for sling assembling facilitates quick installation. Ceramic blocks and fireproof wiring coupled with temperature limit fuse are located inside fire dome.
The individual power rating is selected by means of connection with applicable transformer branch.

ABT-S series loudspeakers equipped with fire dome and thermal protections entirely comply with EN 54-24 Standards. In order to ensure 100% consistency with the highest quality standards we test our loudspeakers following the most meticulous procedures that warrant high parameters of sound emission, safety, and reliability.

In spite of the fact our loudspeaker is designed for the highest reliability under fire conditions, their acoustic parameters and attractive low prices make them successful in any and all public address systems.

CHARACTERISTICS

- » ***The highest level of speech intelligibility***
- » ***Elegant looks***
- » ***6 W transformer allowing a precise selection of loudspeaker output power***
- » ***100% protection of line from breaks and short-circuits***

	ABT-S226
Electrical	
Rated power, W	6
Tappings 100 V line according to EN 54-24, W	6 / 3 / 1,5 / 0,75
Tappings 70 V line, W	3 / 1,5 / 0,75 / 0,37
Transformer impedance @ 100 V, Ω	1667 / 3333 / 6667 / 13333
Driver impedance, Ω	8
Effective frequency range, Hz	120 – 20 000
Sensitivity @ 4 m, 1 W, dB	80
SPL @ 4 m, rated power, dB	87
SPL @ 1 m, 1 W, dB, test signal bandwidth 300 Hz – 6 kHz	93
SPL @ 1 m, rated power, dB, test signal bandwidth 300 Hz – 6 kHz	101
Dispersion at 500 Hz / 1 kHz / 2 kHz / 4 kHz, [°]	180 / 170 / 95 / 70
Environmental	
Environmental type / IP rating according to EN 54-24	A / IP21C
IP rating	32C
Min. / max. ambient temperature	-10°C / 55°C
Mechanical	
Dimensions, mm	Height 115, ø 220
Net weight, kg	1,44
Colour	White (RAL 9003)
Material	Steel
Mounting	Spring clamp
Cut-out, mm	ø 205
Option	
For DC line monitoring	Capacitor (ABT-S226C)
Colour optional	RAL palette
Ease Model	

Frequency band:

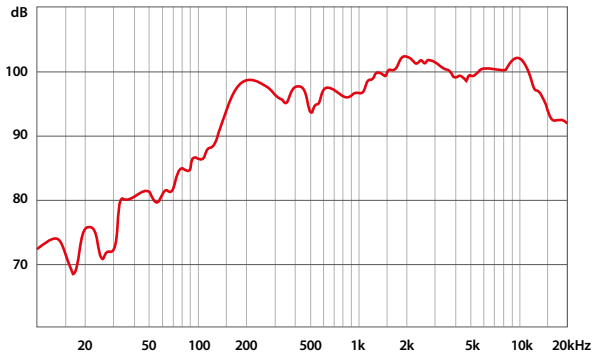

Circular chart of directional characteristic:

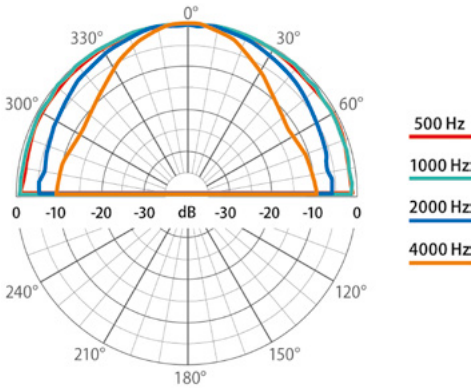

ABT-S206

CEILING-MOUNTED LOUDSPEAKER

- ✓ *Full compliance with EN 54-24 Standards*
- ✓ *Certificate of Conformity: 1438-CPR-0622 EN 54-24*
- ✓ *Compliance with BS5839-8 standard (thermal protection)*

Ceiling mounted fire alarm ABT-S206 loudspeaker is designed for operations at high acoustic levels and the highest reduction in power supply. Actual wide band high efficiency ensures the best understanding of verbal messages. Its parameters have been carefully selected to comply with suspended ceiling applications, both at standard and considerably elevated ceiling- to-floor distance. Thanks to the most advanced technologies ABT-S206 loudspeaker combines excellent acoustic parameters and high aesthetics with resistance to mechanical damages. It is distinguished by easy and quick installation.

Quality standards and audio characteristics have been confirmed through multiple tests and trials employing such facilities as e.g. echoproof chamber, resistance and integrity testing equipment. The ABT-S206 loudspeaker ensure a balanced sound which is extremely important in emission of highly understandable speech and reliable music reproduction.

The ABT-S206 loudspeaker is noticeable thanks to its elegant looks. The loudspeaker part which becomes visible after the installation is protected by means of electroplating and covered by a common and aesthetic white paint coat (RAL 9003) – optionally available other colours (RAL palette). ABT-S206 is equipped with a standardized fire dome made of soft steel and supplied with two cable penetrations with rubber glands. Special jig for sling assembling facilitates quick installation. Two ceramic blocks and fireproof wiring coupled with temperature limit fuse are located inside fire dome. The individual power rating is selected by means of connection with applicable transformer branch.

ABT-S206 loudspeaker equipped with fire dome and thermal protections entirely comply with EN 54-24 Standards. In order to ensure 100% consistency with the highest quality standards we test our loudspeaker following the most meticulous procedures that warrant high parameters of sound emis- sion, safety, and reliability. In spite of the fact our loudspeaker is designed for the highest reliability under fire conditions, their acoustic parameters and attractive low prices make them successful in any and all public address systems.

CHARACTERISTICS

- » ***Highest level of speech intelligibility***
- » ***6-watt transformer allowing precise selection of the speaker power***
- » ***Modern and elegant design***
- » ***High quality sound of both speech and music***

	ABT-S206
Electrical	
Rated power, W	6
Tappings 100 V line according to EN 54-24, W	6 / 3 / 1,5 / 0,75
Tappings 70 V line, W	3 / 1,5 / 0,75 / 0,38
Transformer impedance @ 100 V, Ω	1667 / 3333 / 6667 / 13333
Driver impedance, Ω	8
Effective frequency range, Hz	82–20000
Sensitivity @ 4 m, 1 W, dB	79
SPL @ 4 m, rated power, dB	86
SPL @ 1 m, 1 W, dB, test signal bandwidth 300 Hz – 6 kHz	91
SPL @ 1 m, rated power, dB, test signal bandwidth 300 Hz – 6 kHz	99
Dispersion at 500 Hz / 1 kHz / 2 kHz / 4 kHz, [°]	180 / 180 / 160 / 85
Environmental	
Environmental type / IP rating according to EN 54-24	A / IP21C
IP rating	32C
Min. / max. ambient temperature	-10°C / 55°C
Mechanical	
Dimensions, mm	Height 130, ø204
Net weight, kg	1,34
Colour	Biały (RAL 9003)
Material	Steel
Mounting	Spring clamp
Cut-out, mm	ø 170
Option	
For DC line monitoring	Capacitor (ABT-S206C)
Colour optional	RAL palette

Frequency band:

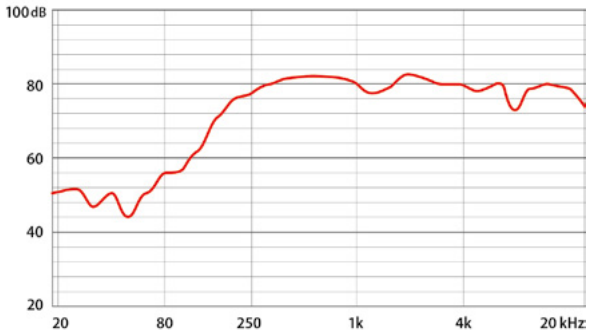

Circular chart of directional characteristic:

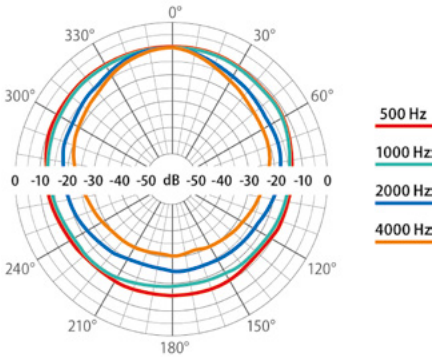

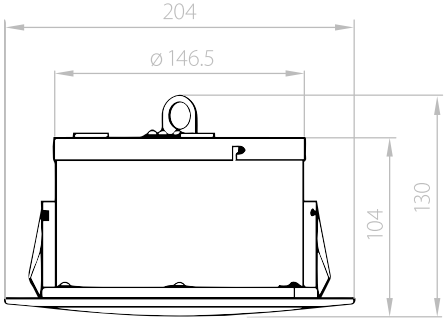

ABT-S206B

EN 54-24

CEILING-MOUNTED LOUDSPEAKERS

- ✓ *Full compliance with EN 54-24 Standard*
- ✓ *Certificate of Conformity: 1438-CPR-0605*
- ✓ *Compliance with BS5839-8 standard (thermal protection)*
- ✓ *Available in white and black*

Ceiling mounted fire alarm ABT-S206B loudspeaker is designed for operations at high acoustic levels and the highest reduction in power supply. Actual wide band high efficiency ensures the best understanding of verbal messages. Its parameters have been carefully selected to comply with suspended ceiling applications, both at standard and considerably elevated ceiling-to-floor distance.

Thanks to the most advanced technologies ABT-S206B loudspeaker combines excellent acoustic parameters and high aesthetics with resistance to mechanical damages. It is distinguished by easy and quick installation.

Quality standards and audio characteristics have been confirmed through tests and trials in an anechoic chamber, resistance and integrity testing equipment, as well as chambers for resistance to weather and air humidity testing.

The ABT-S206B loudspeaker ensure a balanced sound which is extremely important in emission of highly understandable speech.

The ABT-S206B loudspeaker is noticeable thanks to its elegant looks. The loudspeaker part which becomes visible after the installation is covered by a common and aesthetic white paint coat (RAL 9003) – optionally available other colours (RAL palette).

ABT-S206B is equipped with a standardized fire dome made of soft steel and supplied with two cable penetrations with rubber glands. Special jig for sling assembling facilitates quick installation. Ceramic blocks and fireproof wiring coupled with temperature limit fuse are located inside fire dome. The individual power rating is selected by means of connection with applicable transformer branch.

ABT-S series loudspeakers equipped with fire dome and thermal protections entirely comply with EN 54-24 Standards. In order to ensure 100% consistency with the highest quality standards we test our loudspeakers following the most meticulous procedures that warrant high parameters of sound emission, safety, and reliability.

In spite of the fact our loudspeaker is designed for the highest reliability under fire conditions, their acoustic parameters and attractive low prices make them successful in any and all public address systems.

CHARACTERISTICS

- » ***The highest level of speech intelligibility***
- » ***Elegant looks***
- » ***6 W transformer allowing a precise selection of loudspeaker output power***
- » ***100% protection of line from breaks and short-circuits***

	ABT-S206B
Electrical	
Rated power, W	6
Tappings 100 V line according to EN 54-24, W	6 / 3 / 1,5 / 0,75
Tappings 70 V line, W	3 / 1,5 / 0,75 / 0,37
Transformer impedance @ 100 V, Ω	1667 / 3333 / 6667 / 13333
Driver impedance, Ω	8
Effective frequency range, Hz	120 – 20 000
Sensitivity @ 4 m, 1 W, dB	81
SPL @ 4 m, rated power, dB	88
SPL @ 1 m, 1 W, dB, test signal bandwidth 300 Hz – 6 kHz	93
SPL @ 1 m, rated power, dB, test signal bandwidth 300 Hz – 6 kHz	101
Dispersion at 500 Hz / 1 kHz / 2 kHz / 4 kHz, [°]	180 / 180 / 95 / 70
Environmental	
Environmental type / IP rating according to EN 54-24	A / IP21C
IP rating	32C
Min. / max. ambient temperature	-10°C / 55°C
Mechanical	
Dimensions, mm	Height 115, ø 199
Net weight, kg	1,13
Colour	White (RAL 9003) / Black (RAL 9011)
Material	Steel
Mounting	Spring clamp
Cut-out, mm	ø 175
Option	
For DC line monitoring	Capacitor (ABT-S206BC)
Colour optional	RAL palette
Ease Model	✓

Frequency band:

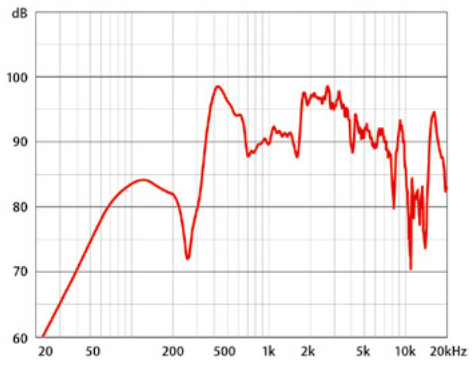

Circular chart of directional characteristic:

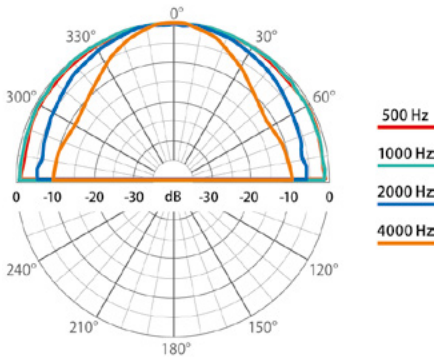

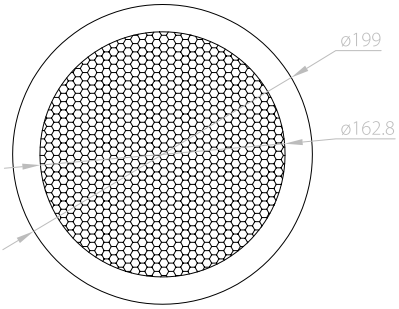

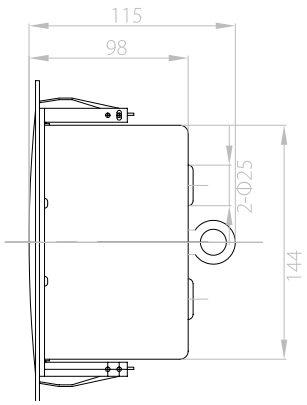

ABT-S186

EN 54-24

CEILING-MOUNTED LOUDSPEAKERS

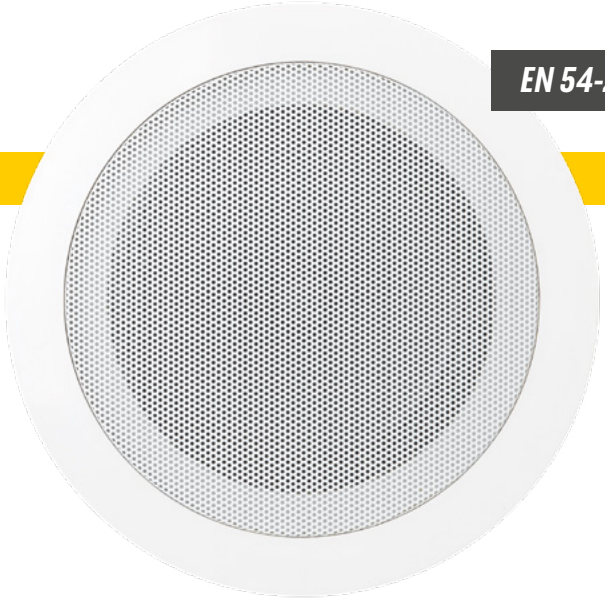

- ✓ *Full compliance with EN 54-24 Standard*
- ✓ *Certificate of Conformity: 1438-CPR-0648*
- ✓ *Compliance with BS5839-8 standard (thermal protection)*

Ceiling mounted fire alarm ABT-S186 loudspeaker is designed for operations at high acoustic levels. Actual wide band high efficiency ensures the best understanding of verbal messages. Its parameters have been carefully selected to comply with suspended ceiling applications.

Thanks to the most advanced technologies ABT-S186 loudspeaker combines excellent acoustic parameters and high aesthetics. It is distinguished by easy and quick installation.

Quality standards and audio characteristics have been confirmed through tests and trials in an anechoic chamber, resistance and integrity testing equipment, as well as chambers for resistance to weather and air humidity testing.

The ABT-S186 loudspeaker ensure a balanced sound which is extremely important in emission of highly understandable speech.

ABT-S186 is equipped with a standardized fire dome made of ABS and supplied with two cable penetrations with rubber glands.

The individual power rating is selected by means of connection with applicable transformer branch.

ABT-S186 loudspeaker equipped with fire dome, ceramic block and thermal protections entirely comply with EN 54-24 Standard. In order to ensure 100% consistency with the highest quality standards we test our loudspeakers following the most meticulous procedures that warrant high parameters of sound emission, safety, and reliability.

In spite of the fact our loudspeaker is designed for the highest reliability under fire conditions, their acoustic parameters and attractive low prices make them successful in any and all public address systems.

CHARACTERISTICS

- » ***The highest level of speech intelligibility***
- » ***Elegant looks***
- » ***6 W transformer allowing a precise selection of loudspeaker output power***
- » ***100% protection of line from breaks and short-circuits***

	ABT-S186
Electrical	
Rated power, W	6
Tappings 100 V line according to EN 54-24, W	6 / 3 / 1,5 / 0,75
Tappings 70 V line, W	3 / 1,5 / 0,75 / 0,37
Transformer impedance, Ω	1667 / 3333 / 6667 / 13333
Driver impedance, Ω	8
Effective frequency range, Hz	120 – 20 000
Sensitivity @ 4 m, 1 W, dB	79
SPL @ 4 m, rated power, dB	86
SPL @ 1 m, 1 W, dB, test signal bandwidth 300 Hz – 6 kHz	91
SPL @ 1 m, rated power, dB, test signal bandwidth 300 Hz – 6 kHz	99
Dispersion at 500 Hz / 1 kHz / 2 kHz / 4 kHz, [°]	180 / 180 / 150 / 90
Environmental	
Environmental type / IP rating according to EN 54-24	A / IP21C
IP rating	32C
Min. / max. ambient temperature	-10°C / 55°C
Mechanical	
Dimensions, mm	Height 75, ø 175
Net weight, kg	0,66
Colour	White (RAL 9003)
Material	ABS
Mounting	Spring clamp
Cut-out, mm	ø 150
Option	
For DC line monitoring	Capacitor (ABT-S186C)

Frequency band:

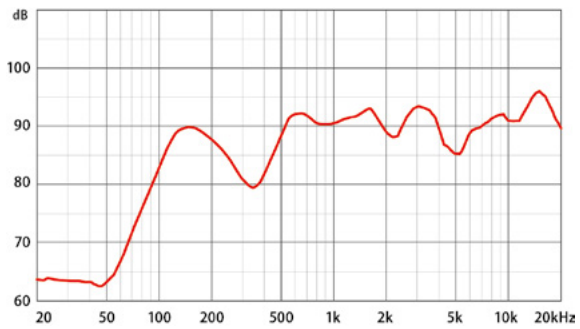

Circular chart of directional characteristic:

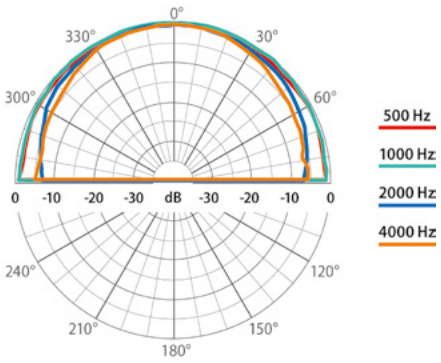

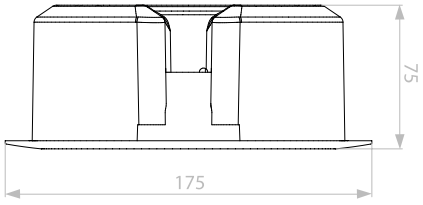

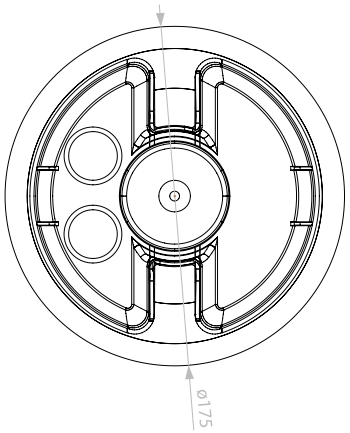

ABT-S183 / ABT-S183C

EN 54-24

CEILING-MOUNTED LOUDSPEAKERS

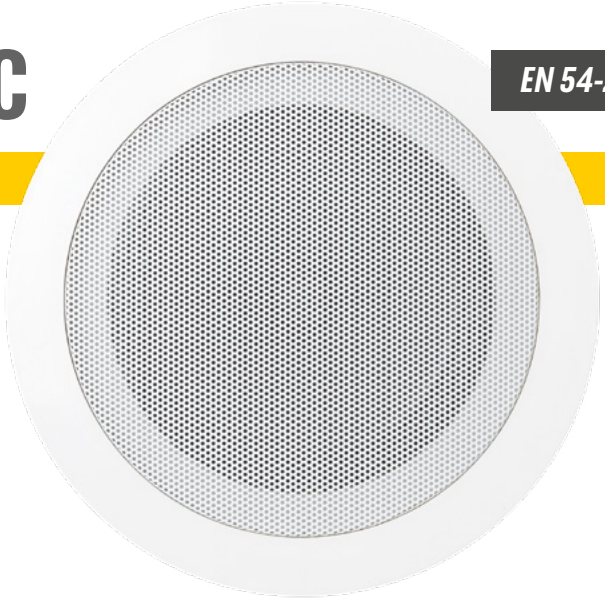

- ✓ *Full compliance with EN 54-24 Standard*
- ✓ *Certificate of Conformity: 1438-CPR-0648*
- ✓ *Compliance with BS5839-8 standard (thermal protection)*

Ceiling mounted fire alarm ABT-S183 loudspeaker is designed for operations at high acoustic levels. Actual wide band high efficiency ensures the best understanding of verbal messages. Its parameters have been carefully selected to comply with suspended ceiling applications.

Thanks to the most advanced technologies ABT-S183 loudspeaker combines excellent acoustic parameters and high aesthetics. It is distinguished by easy and quick installation.

Quality standards and audio characteristics have been confirmed through tests and trials in an anechoic chamber, resistance and integrity testing equipment, as well as chambers for resistance to weather and air humidity testing.

The ABT-S183 loudspeaker ensure a balanced sound which is extremely important in emission of highly understandable speech.

ABT-S183 is equipped with a standardized fire dome made of ABS and supplied with two cable penetrations with rubber glands.

The individual power rating is selected by means of connection with applicable transformer branch.

ABT-S183 loudspeaker equipped with fire dome, ceramic block and thermal protections entirely comply with EN 54-24 Standard. In order to ensure 100% consistency with the highest quality standards we test our loudspeakers following the most meticulous procedures that warrant high parameters of sound emission, safety, and reliability.

In spite of the fact our loudspeaker is designed for the highest reliability under fire conditions, their acoustic parameters and attractive low prices make them successful in any and all public address systems.

CHARACTERISTICS

- » ***The highest level of speech intelligibility***
- » ***Elegant looks***
- » ***6 W transformer allowing a precise selection of loudspeaker output power***
- » ***100% protection of line from breaks and short-circuits***

	ABT-S183 / ABT-S183C
Electrical	
Rated power, W	3
Tappings 70 V line, W	3 / 1,5 / 0,75 / 0,37
Transformer impedance @ 70 V, Ω	1667 / 3333 / 6667 / 13333
Driver impedance, Ω	8
Effective frequency range, Hz	120 – 20 000
Sensitivity @ 4 m, 1 W, dB	77
SPL @ 4 m, rated power, dB	81
SPL @ 1 m, 1 W, dB, test signal bandwidth 300 Hz – 6 kHz	79
SPL @ 1 m, rated power, dB, test signal bandwidth 300 Hz – 6 kHz	93
Dispersion at 500 Hz / 1 kHz / 2 kHz / 4 kHz, [°]	180 / 180 / 150 / 90
Environmental	
Environmental type / IP rating according to EN 54-24	A / IP21C
IP rating	32C
Min. / max. ambient temperature	-10°C / 55°C
Mechanical	
Dimensions, mm	Height 75, ø 175
Net weight, kg	0,66
Colour	White (RAL 9003)
Material	ABS
Mounting	Spring clamp
Cut-out, mm	ø 150
Option	
For DC line monitoring	Capacitor (ABT-S183C)

Frequency band:

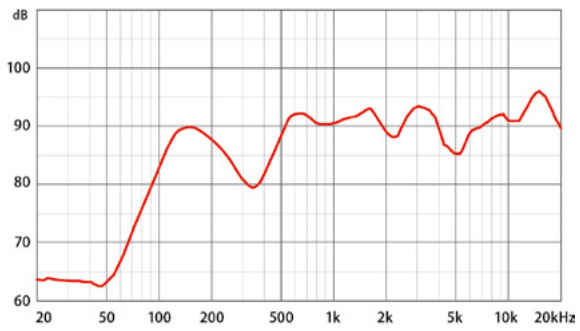

Circular chart of directional characteristic:

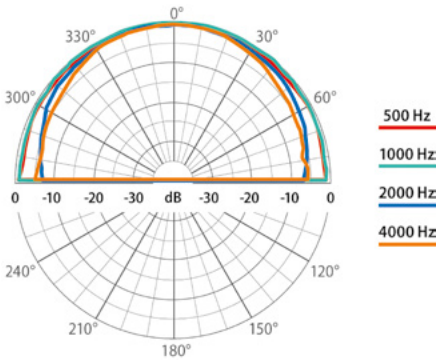

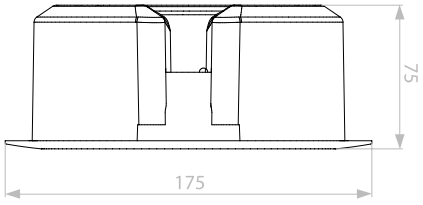

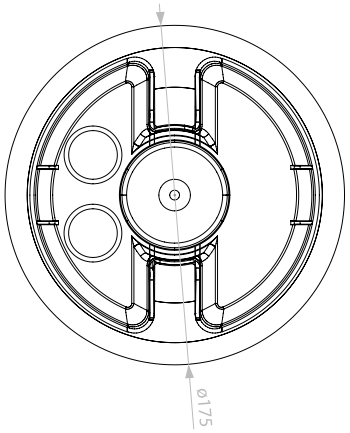

ABT-S106 / ABT-S136

CEILING-MOUNTED LOUDSPEAKERS

- ✓ *Compliance with EN 54-24*
- ✓ *Certificate of Conformity: 1438-CPR-0635*
- ✓ *Compliance with BS5839-8 standard (thermal protection)*

Ceiling-mounted fire alarm loudspeakers ABT-S106 and ABT-S136 are designed for applications which require the minimum size at the maximum sound quality. Their parameters have been carefully selected to match the operating requirements in the rooms exposed to after-sound and high-humidity.

Thanks to the most advanced technologies the ABT-S series loudspeakers combine excellent acoustic parameters and high aesthetics with resistance to mechanical damages and varying weather conditions. They are distinguished by easy and quick installation.

Quality standards and audio characteristics have been confirmed through tests and trials in an anechoic chamber, resistance and integrity testing equipment, as well as chambers for resistance to weather and air humidity testing.

The need to maintain the best acoustic parameters, even with easily installed fire-protecting screens, was the idea underlying the design process. The ABT-S series loudspeakers ensure a balanced sound which is extremely important in emission of highly understandable speech and reliable music reproduction.

The series of ceiling-mounted ABT-S loudspeakers is noticeable thanks to its elegant looks. The loudspeaker part which becomes visible after the installation is protected by means of electroplating and covered by a common and aesthetic white paint coat (RAL 9003) – optionally available other colours (RAL palette).

The entire ABT-S series is equipped with a standardized fire dome made of soft steel and supplied with two cable penetrations with rubber glands. Special jig for sling assembling facilitates quick installation. The delivery comprises the 1-metre long sling. Two ceramic blocks and fireproof wiring coupled with temperature limit fuse are located under the screen. This solution ensures 100% protection of the sound-transmitting line from any break or short-circuits which may be produced as a result of loudspeaker burn. The individual power rating is selected by means of connection with applicable transformer branch.

ABT-S series loudspeakers equipped with fire dome and thermal protections entirely comply with EN 54-24 Standards. In order to ensure 100% consistency with the highest quality standards we test our loudspeakers following the most meticulous procedures that warrant high parameters of sound emission, safety, and reliability.

In spite of the fact our loudspeakers are designed for the highest reliability under fire conditions, their acoustic parameters and attractive low prices make them successful in any and all public address systems.

CHARACTERISTICS

- » ***Minimum dimensions***
- » ***A and C working environment, ideal for bathrooms***
- » ***Exceptionally reliable reproduction of full band music***
- » ***The highest level of speech intelligibility***
- » ***Elegant looks***
- » ***6 W transformer allowing a precise selection of loudspeaker output power***
- » ***100% protection of line from breaks and short-circuits***

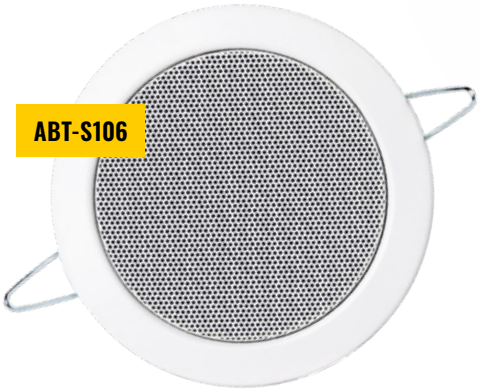

	ABT-S106	ABT-S136
Electrical		
Rated power, W	6	6
Tappings 100 V line according to EN 54-24, W	6 / 3 / 1,5 / 0,75	6 / 3 / 1,5 / 0,75
Tappings 70 V line, W	3 / 1,5 / 0,75 / 0,38	3 / 1,5 / 0,75 / 0,38
Transformer impedance @ 100 V, Ω	1667 / 3333 / 6667 / 13333	1667 / 3333 / 6667 / 13333
Driver impedance, Ω	8	8
Effective frequency range, Hz	100 – 20000	60 – 20000
Sensitivity @ 4 m, 1 W, dB	65	68
SPL @ 4 m, rated power, dB	76	78
SPL @ 1 m, 1 W, dB, test signal bandwidth 300 Hz – 6 kHz	80	82
SPL @ 1 m, rated power, dB, test signal bandwidth 300 Hz – 6 kHz	88	90
Dispersion at 500 Hz / 1 kHz / 2 kHz / 4 kHz, [°]	180 / 180 / 170 / 150	180 / 180 / 170 / 90
Environmental		
Environmental type / IP rating according to EN 54-24	A, C / IP21C	A, C / IP21C
IP rating	32	32
Min. / max. ambient temperature	-10°C / 55°C	-10°C / 55°C
Mechanical		
Dimensions, mm	Height 111, ø 104	Height 113, ø 134
Net weight, kg	0,72	0,82
Colour	White (RAL 9003)	
Material	Steel	
Mounting	Spring clamp	
Cut-out, mm	ø 85	ø 106
Option		
For DC line monitoring	Capacitor	
Colour optional	RAL palette	
Ease Model		✓

Frequency band:

ABT-S106

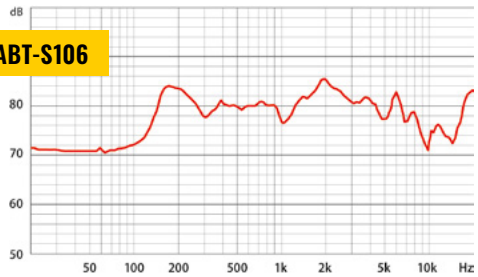

Circular chart of directional characteristic:

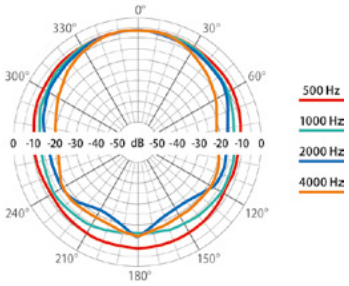

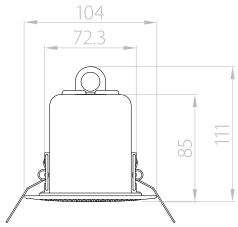

Frequency band:

ABT-S136

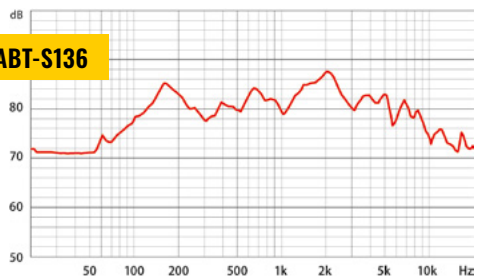

Circular chart of directional characteristic:

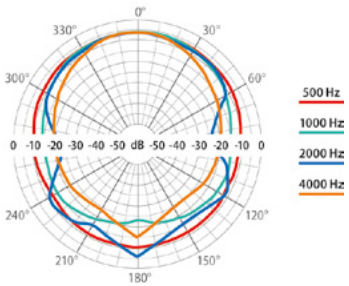

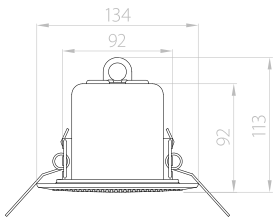

ABT-S2010 / ABT-S2710

CEILING-MOUNTED LOUDSPEAKERS

EN 54-24

- ✓ *Compliance with EN 54-24*
- ✓ *Certificate of Conformity: 1488-CPR-0170/W*
- ✓ *Compliance with BS5839-8 standard (thermal protection)*

Ceiling mounted fire alarm ABT-S2010 and ABT-S2710 loudspeakers are designed for operations at high acoustic levels and the highest reduction in power supply. Actual wide band high efficiency ensures the best understanding of verbal messages. Their parameters have been carefully selected to comply with false ceiling applications, both at standard and considerably elevated ceiling-to-floor distance.

Thanks to the most advanced technologies the ABT-S series loudspeakers combine excellent acoustic parameters and high aesthetics with resistance to mechanical damages and varying weather conditions. They are distinguished by easy and quick installation.

Quality standards and audio characteristics have been confirmed through tests and trials in an anechoic chamber, resistance and integrity testing equipment, as well as chambers for resistance to weather and air humidity testing.

The need to maintain the best acoustic parameters, even with easily installed fire-protecting screens, was the idea underlying the design process. The ABT-S series loudspeakers ensure a balanced sound which is extremely important in emission of highly understandable speech and reliable music reproduction.

The series of ceiling-mounted ABT-S loudspeakers is noticeable thanks to its elegant looks. The loudspeaker part which becomes visible after the installation is protected by means of electroplating and covered by a common and aesthetic white paint coat (RAL 9003) – optionally available other colours (RAL palette).

The entire ABT-S series is equipped with a standardized fire dome made of soft steel and supplied with two cable penetrations with rubber glands. Special jig for sling assembling facilitates quick installation. The delivery comprises the 1-metre long sling. Two ceramic blocks and fireproof wiring coupled with temperature limit fuse are located under the screen. This solution ensures 100% protection of the sound-transmitting line from any break or short-circuits which may be produced as a result of loudspeaker burn. The individual power rating is selected by means of connection with applicable transformer branch.

ABT-S series loudspeakers equipped with fire dome and thermal protections entirely comply with EN 54-24 Standards. In order to ensure 100% consistency with the highest quality standards we test our loudspeakers following the most meticulous procedures that warrant high parameters of sound emission, safety, and reliability.

In spite of the fact our loudspeakers are designed for the highest reliability under fire conditions, their acoustic parameters and attractive low prices make them successful in any and all public address systems.

CHARACTERISTICS

- » ***High efficiency***
- » ***High acoustic pressure level***
- » ***Exceptionally reliable full band music reproduction***
- » ***The highest level of speech intelligibility***
- » ***Elegant looks***
- » ***10 W transformer allowing precise selection of loudspeaker output power***
- » ***100% protection of line from breaks and short-circuits***

	ABT-S2010	ABT-S2710
Electrical		
Rated power, W	10	10
Tappings 100 V line according to EN 54-24, W	10 / 5 / 2,5 / 1,25	10 / 5 / 2,5 / 1,25
Tappings 70 V line, W	5 / 2,5 / 1,25 / 0,625	5 / 2,5 / 1,25 / 0,625
Transformer impedance @ 100 V, Ω	1000 / 2000 / 4000 / 8000	1000 / 2000 / 4000 / 8000
Driver impedance, Ω	8	8
Effective frequency range, Hz	150 – 20000	100 – 20000
Sensitivity @ 4 m, 1 W, dB	77	78
SPL @ 4 m, rated power, dB	90	92
SPL @ 1 m, 1 W, dB, test signal bandwidth 300 Hz – 6 kHz	94	95
SPL @ 1 m, rated power, dB, test signal bandwidth 300 Hz – 6 kHz	104	105
Dispersion at 500 Hz / 1 kHz / 2 kHz / 4 kHz, [°]	180 / 170 / 115 / 55	180 / 170 / 90 / 60
Environmental		
Environmental type / IP rating according to EN 54-24	A / IP21C	A / IP21C
IP rating	32	32
Min. / max. ambient temperature	-10°C / 55°C	-10°C / 55°C
Mechanical		
Dimensions, mm	Height 110, ø 200	Height 120, ø 267
Net weight, kg	1,4	1,75
Colour	White (RAL 9003)	
Material	Steel	
Mounting	Spring clamp	
Cut-out, mm	ø 172	ø 222
Option		
For DC line monitoring	Capacitor	
Colour optional	RAL Palette	
Ease Model	✓	

Frequency band:

ABT-S2010

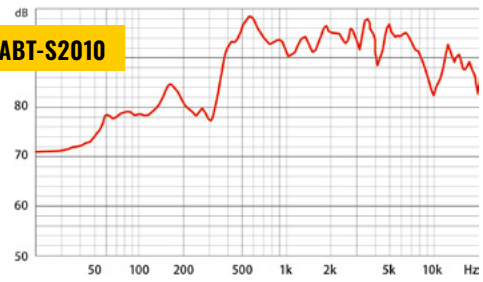

Circular chart of directional characteristic:

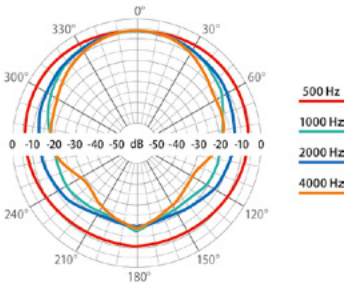

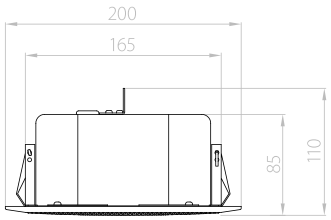

Frequency band:

ABT-S2710

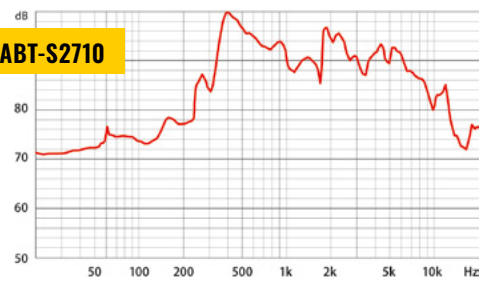

Circular chart of directional characteristic:

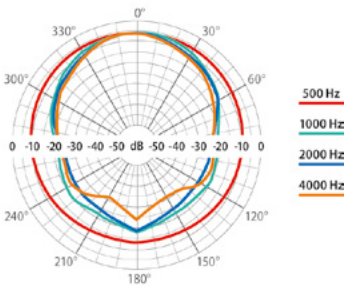

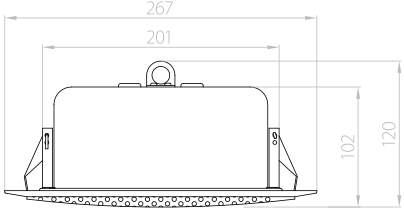

ABT-P10BD

EN 54-24

BI-DIRECTIONAL SOUND PROJECTOR

- ✓ *Compliance with EN 54-24*
- ✓ *Certificate of Conformity: 1438-CPR-1029*
- ✓ *Compliance with BS5839-8 standard (thermal protection)*

NEW!

The speaker has 10W power output, features a pair of 130mm full-range loudspeakers and a 100V line transformer offering four power adjustments. Encased in a durable powder-coated aluminum housing in RAL 9010, along with vandal-resistant mounting, it ensures durable installation. Enhanced reliability is ensured with a 2-pin ceramic block and a thermal fuse.

With its IP65 high protection rating, the speaker is protected against environmental conditions. Ideally suited for installation in corridors and hallways.

CHARACTERISTICS

- » ***10 W transformer with multiple branches ensuring accurate selection of output power***
- » ***Enclosed in cylindrical casing made of aluminium***
- » ***Ideal for either ceiling or wall installation***
- » ***Fireproof casing with ceramic block and thermal fuse***

	ABT-P10BD
Electrical	
Rated power, W	10
Tappings 100 V line according to EN 54-24, W	10 / 6 / 3 / 1,5
Tappings 70 V line, W	5 / 3 / 1,5 / 0,75
Transformer impedance @ 100 V, Ω	1000 / 1667 / 3333 / 6667
Driver impedance, Ω	8
Effective frequency range, Hz	79 - 17500
Sensitivity @ 4 m, 1 W, dB	77
SPL @ 4 m, rated power, dB	86
SPL @ 1 m, 1 W, dB, test signal bandwidth 300 Hz – 6 kHz	89
SPL @ 1 m, rated power, dB, test signal bandwidth 300 Hz – 6 kHz	98
Dispersion at 500 Hz / 1 kHz / 2 kHz / 4 kHz, [°]	2 × 130 / 2 × 150 / 2 × 145 / 2 × 75
Environmental	
Environmental type / IP rating according to EN 54-24	B / IP33C
IP rating*	65
Min. / max. ambient temperature	-25°C / 70°C
Mechanical	
Dimensions, mm	197 × 176 × 161
Net weight, kg	2,35
Colour	White (RAL 9010)
Material	Aluminium
Mounting	Screw
Option	
Colour optional	RAL palette
Model Ease	✓

* not confirmed by CNBOP-PIB

Frequency band:

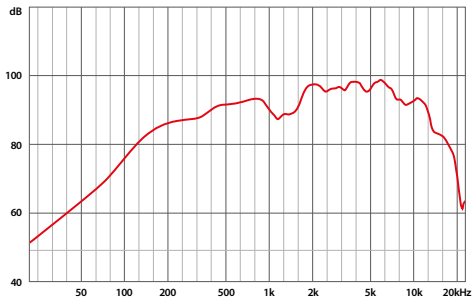

Circular chart of directional characteristic:

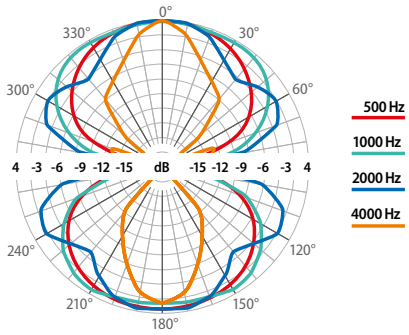

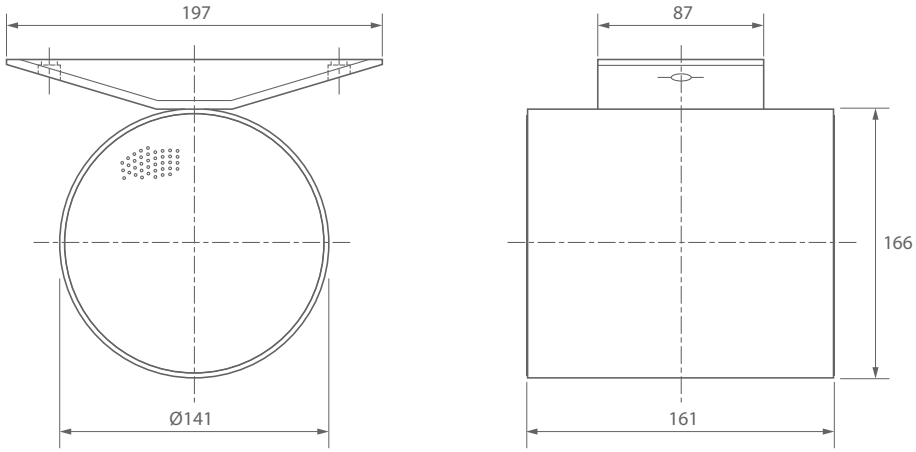

ABT-P10 / ABT-P10P

EN 54-24

SOUND PROJECTORS

- ✓ *Compliance with EN 54-24*
- ✓ *Certificate of Conformity: 1438-CPR-0701*
- ✓ *Compliance with BS5839-8 standard (thermal protection)*

ABT-P10

Fire alarm ABT-P10, ABT-P10P loudspeakers have been designed and manufactured for the most demanding customers as well as to meet the requirements of the most complex and sophisticated sound transmitting applications. Thanks to the contribution of advanced technologies they combine excellent acoustic parameters and high aesthetics with resistance to mechanical damages and varying weather conditions as well as low prices. Their additional quality is an exceptionally quick and simple installation.

Quality standards and audio characteristics have been confirmed through tests and trials in an anechoic chamber, resistance and integrity testing equipment, as well as chambers for resistance to weather and air humidity testing. The need to maintain the best acoustic parameters was the idea underlying the design process.

ABT-P loudspeaker models emitting the sound which features directional characteristic and high efficiency. 5-inch 2-cone wide band loudspeakers used in these series are excellent alternative solution for horn-type units due to wide frequency band. They prove excellent in both musical and verbal applications. ABT-P10 and ABT-P10P loudspeakers are enclosed in round casings made of resistant and durable ABS; they feature a high class of protection from humidity. Thanks to directional characteristic of sound propagation our loudspeakers are mostly applied on circulation routes and in wide area sound emission. Due to resistance to weather conditions the loudspeakers prove excellent in industrial halls, warehouses, as well as partly open spaces exposed to outdoor weather conditions.

Apart from high mechanical and functional resistance ABT-P loudspeakers entirely comply with global requirements for systems, including also the British Standard No. BS5839 Part 8 and EN 54-24.

All ABT-P loudspeakers have built-in a ceramic connection block and a thermal fuse. Two sound-transmission cable penetrations in the casing are insulated by means of two cable glands. Inside the fire zone the loudspeaker is isolated from the entire line, which ensures line continuity and uninterrupted broadcasting of emergency messages. The individual power rating is selected by means of connection with applicable transformer branch.

ABT-P loudspeakers are designed for continuous operations at rated parameters for at least 100 hours in compliance with the IEC-268-5 Standard.

ABT-P10P loudspeakers are designed for pendant mounting. They are equipped with an additional junction box enabling simple and quick speaker installation. They are used wherever the distance from ceiling mounted speaker is too large.

CHARACTERISTICS

- » ***Designed to achieve directional characteristic of sound emission***
- » ***10 W transformer with multiple branches ensuring accurate selection of output power***
- » ***Enclosed in an advance and functional cylindrical casing made of resistant and durable ABS***
- » ***Ideal for either ceiling or wall installation***
- » ***Durable casing with ceramic block and thermal fuse***
- » ***High sound quality in music and speech emission***

ABT-P10P

	ABT-P10	ABT-P10P
Electrical		
Rated power, W	10	
Tappings 100 V line according to EN 54-24, W	10 / 5 / 2,5 / 1,25	
Tappings 70 V line, W	5 / 2,5 / 1,25 / 0,625	
Transformer impedance @ 100 V, Ω	1000 / 2000 / 4000 / 8000	
Driver impedance, Ω	8	
Effective frequency range, Hz	130 – 20000	
Sensitivity @ 4 m, 1 W, dB	80	
SPL @ 4 m, rated power, dB	88	
SPL @ 1 m, 1 W, dB, test signal bandwidth 300 Hz – 6 kHz	92	
SPL @ 1 m, rated power, dB, test signal bandwidth 300 Hz – 6 kHz	100	
Dispersion at 500 Hz / 1 kHz / 2 kHz / 4 kHz, [°]	360 / 210 / 120 / 65	
Environmental		
Environmental type / IP rating according to EN 54-24	B / IP33C	
IP rating*	66	
Min. / max. ambient temperature	-25°C / 70°C	
Mechanical		
Dimensions, mm	Length 205, ø 135	
Net weight, kg	1,6	2
Colour	White (RAL 9003)	
Material	ABS	
Mounting	Screw, U type bracket	Screw, pendant
Option		
For DC line monitoring	Capacitor (ABT-P10C / ABT-P10PC)	
Ease Model	✓	

* not confirmed by CNBOP-PIB

Frequency band:

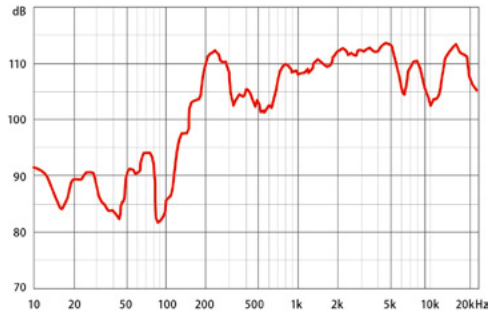

Circular chart of directional characteristic:

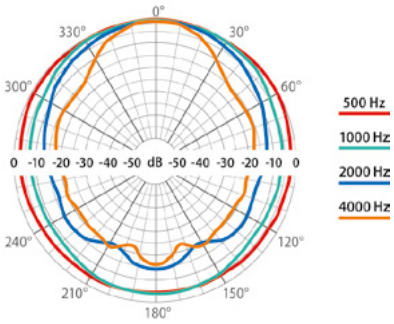

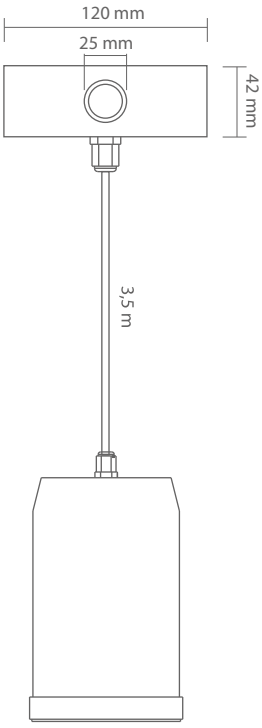

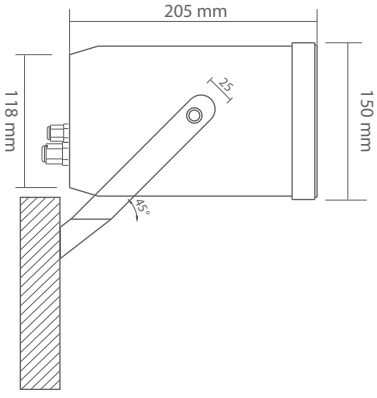

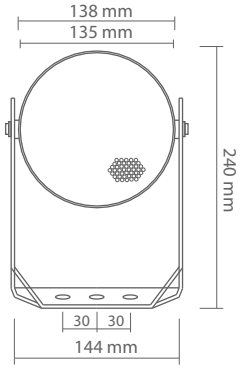

ABT-P20 / ABT-P20P

EN 54-24

SOUND PROJECTORS

- ✓ *Compliance with EN 54-24*
- ✓ *Certificate of Conformity: 1438-CPR-0702*
- ✓ *Compliance with BS5839-8 standard (thermal protection)*

Fire alarm ABT-P20, ABT-P20P loudspeakers have been designed and manufactured for the most demanding customers as well as to meet the requirements of the most complex and sophisticated sound transmitting applications. Thanks to the contribution of advanced technologies they combine excellent acoustic parameters and high aesthetics with resistance to mechanical damages and varying weather conditions as well as low prices. Their additional quality is an exceptionally quick and simple installation.

Quality standards and audio characteristics have been confirmed through tests and trials in an anechoic chamber, resistance and integrity testing equipment, as well as chambers for resistance to weather and air humidity testing. The need to maintain the best acoustic parameters was the idea underlying the design process.

ABT-P loudspeaker models emitting the sound which features directional characteristic and high efficiency. 5-inch 2-cone wide band loudspeakers used in these series are excellent alternative solution for horn-type units due to wide frequency band. They prove excellent in both musical and verbal applications. ABT-P20 and ABT-P20P loudspeakers are enclosed in round casings made of extruded aluminium; they feature a high class of protection from humidity. Thanks to directional characteristic of sound propagation our loudspeakers are mostly applied on circulation routes and in wide area sound emission. Due to resistance to weather conditions the loudspeakers prove excellent in industrial halls, warehouses, as well as partly open spaces exposed to outdoor weather conditions.

Apart from high mechanical and functional resistance ABT-P loudspeakers entirely comply with global requirements for systems, including also the British Standard No. BS5839 Part 8 and EN 54-24.

Technical solutions applied in the design ensure continuous operations of sound-transmitting line connected with the loudspeaker even in the case the latter is damaged or burnt as a result of fire. The said protection is composed of ceramic blocks installed inside the loudspeaker, internal fireproof wiring, and temperature limit fuse. Two sound-transmission cable penetrations in the casing are insulated by means of two cable glands. Inside the fire zone the loudspeaker is isolated from the entire line, which ensures line continuity and uninterrupted broadcasting of emergency messages. The individual power rating is selected by means of connection with applicable transformer branch.

ABT-P loudspeakers are designed for continuous operations at rated parameters for at least 100 hours in compliance with the IEC-268-5 Standard.

ABT-P20P loudspeakers are designed for pendant mounting. They are equipped with an additional junction box enabling simple and quick speaker installation. They are used wherever the distance from ceiling mounted speaker is too large.

CHARACTERISTICS

- » ***Designed to achieve directional characteristic of sound emission***
- » ***20 W transformer with multiple branches ensuring accurate selection of output power***
- » ***Enclosed in an advance and functional cylindrical casing made of extruded aluminium***
- » ***Ideal for either ceiling or wall installation***
- » ***Fireproof casing with ceramic block and thermal fuse***
- » ***High sound quality in music and speech emission***

	ABT-P20	ABT-P20P
Electrical		
Rated power, W	20	
Tappings 100 V line according to EN 54-24, W	20 / 10 / 5 / 2,5	
Tappings 70 V line, W	10 / 5 / 2,5 / 1,25	
Transformer impedance @ 100 V, Ω	500 / 1000 / 2000 / 4000	
Driver impedance, Ω	8	
Effective frequency range, Hz	130 – 20000	
Sensitivity @ 4 m, 1 W, dB	79	
SPL @ 4 m, rated power, dB	90	
SPL @ 1 m, 1 W, dB, test signal bandwidth 300 Hz – 6 kHz	91	
SPL @ 1 m, rated power, dB, test signal bandwidth 300 Hz – 6 kHz	102	
Dispersion at 500 Hz / 1 kHz / 2 kHz / 4 kHz, [°]	360 / 230 / 110 / 65	
Environmental		
Environmental type / IP rating according to EN 54-24	B / IP33C	
IP rating*	66	
Min. / max. ambient temperature	-25°C / 70°C	
Mechanical		
Dimensions, mm	Length 210, ø 143	
Net weight, kg	2,4	2,8
Colour	White (RAL 9003)	
Material	Aluminium	
Mounting	Screw, U type bracket	Screw, pendant
Option		
For DC line monitoring	Capacitor (ABT-P20C / ABT-P20PC)	
Colour optional	RAL palette	
Model Ease	✓	

* not confirmed by CNBOP-PIB

Frequency band:

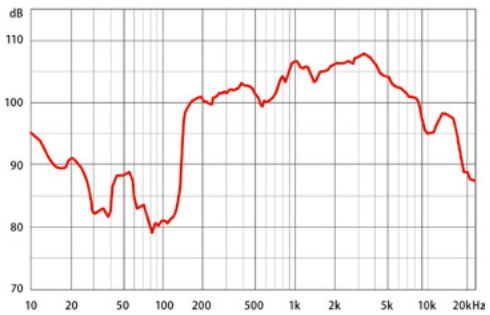

Circular chart of directional characteristic:

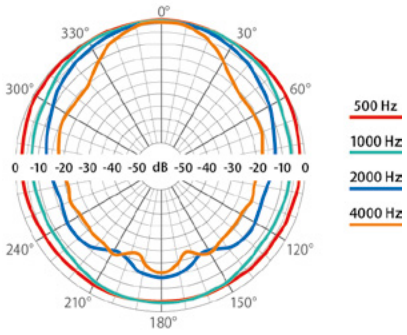

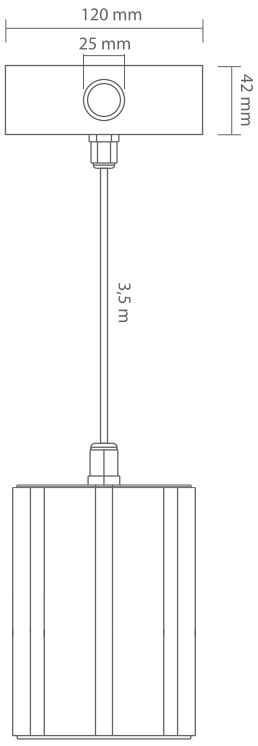

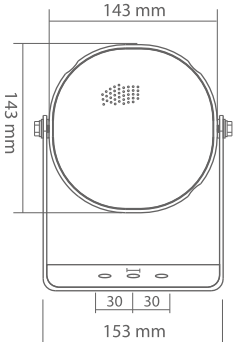

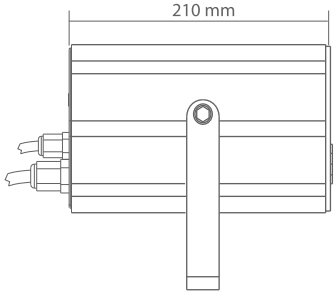

ABT-T1310 / T2115 / T2330

EN 54-24

HORN-TYPE LOUDSPEAKERS

- ✓ *Compliance with EN 54-24*
- ✓ *Certificate of Conformity issued by CNBOP: 1438-CPR-XXXX*
- ✓ *Compliance with BS5839-8 standard (thermal protection)*

ABT-T1310, ABT-T2115, and ABT-T2330 are a family of horn speakers with power ratings of 10W, 15W, and 30W, designed for voice evacuation systems (VES). These speakers offer high sensitivity and directional sound dispersion. With housings made of fire-resistant ABS, these products ensure long-term durability and reliability, even in challenging environmental conditions.

Each speaker is equipped with a 100V line transformer with four power settings and the ability to operate at low impedance.

The high protection class of IP 66 guarantees resistance to external factors, while additional safety features such as a ceramic connection block and thermal fuse enhance reliability in emergency situations by protecting the continuity of the speaker line from interruption or short circuits in the event of a fire.

The ABT-T1310, ABT-T2115, and ABT-T2330 speakers comply with EN 54-24 and BS 5839 standards, ensuring their reliability and safety.

CHARACTERISTICS

- » ***Directional characteristic of sound emission and high sensitivity***
- » ***Working environment – B***
- » ***Wall and ceiling installation***
- » ***Protection from dust and humidity: IP66 rating***
- » ***Casing made of self-extinguishing ABS UL94V0 plastic, with steel assembling jig***
- » ***100% line protection from short-circuit and break in fire conditions***

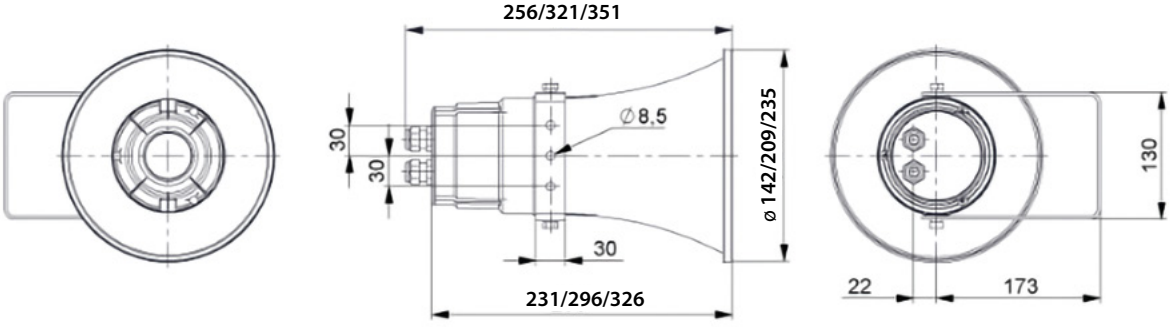

	ABT-T1310	ABT-T2115	ABT-T2330
Electrical			
Rated power, W	10	15	30
Tappings 100 V line according to EN 54-24, W	10 / 5 / 2,5 / 1,25	15 / 7,5 / 3,75 / 1,9	30 / 20 / 10 / 5
Tappings 70 V line, W	5 / 2,5 / 1,25 / 0,62	7,5 / 3,75 / 1,87 / 0,85	15 / 10 / 5 / 2,5
Transformer impedance @ 100 V, Ω	1000 / 2000 / 4000 / 8000	667 / 1333 / 2667 / 5263	333 / 500 / 1000 / 2000
Driver impedance, Ω	20	20	20
Effective frequency range, Hz	370 – 13600	370 – 13600	250 – 15000
Sensitivity @ 4 m, 1 W, dB	83	83	85
SPL @ 4 m, rated power, dB	91	93	96
SPL @ 1 m, 1 W, dB, test signal bandwidth 300 Hz – 6 kHz	95	95	97
SPL @ 1 m, rated power, dB, test signal bandwidth 300 Hz – 6 kHz	103	107	108
Dispersion at 500 Hz / 1 kHz / 2 kHz / 4 kHz, [°]	360 / 360 / 105 / 50	360 / 110 / 70 / 40	155 / 110 / 65 / 35
Environmental			
Environmental type / IP rating according to EN 54-24		B / IP33C	
IP rating		66	
Min. / max. ambient temperature		-25 °C / 70 °C	
Mechanical			
Dimensions, mm	Length 256, ø 142	Length 321 ø 209	Length 351, ø 235
Net weight, kg	1,9	2,08	2,27
Colour		Light grey (RAL 7035)	
Material		ABS UL94V0	
Mounting		Screw, U type bracket	
Option			
For DC line monitoring		Capacitor	
Ease Model		✓	

Frequency band:

ABT-T1310

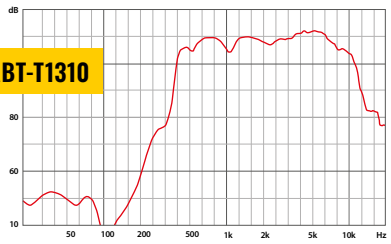

Frequency band:

ABT-T2215

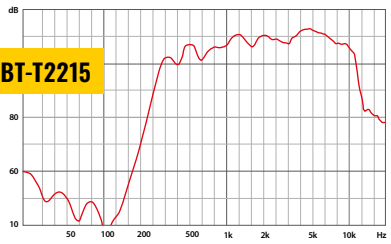

Frequency band:

ABT-T2330

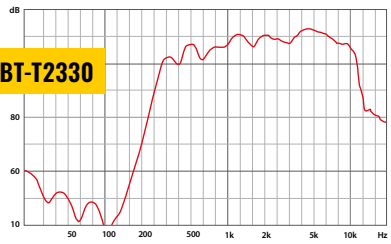

Circular chart of directional characteristic:

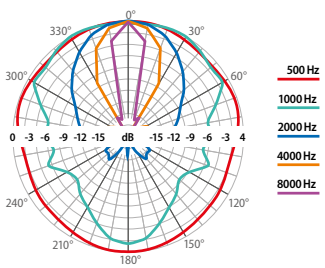

Circular chart of directional characteristic:

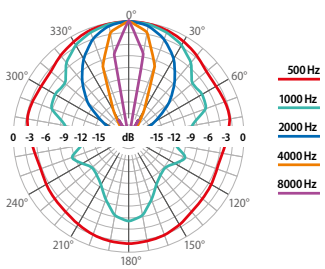

Circular chart of directional characteristic:

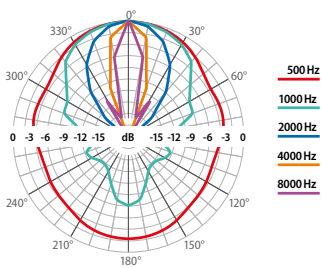

ABT-T1410 / T2015

EN 54-24

HORN-TYPE LOUDSPEAKERS

- ✓ *Compliance with EN 54-24*
- ✓ *Certificate of Conformity issued by CNBOP: 1438-CPR-0801*
- ✓ *Compliance with BS5839-8 standard (thermal protection)*

Horn-type fire alarm ABT-T1410/T2015 loudspeakers are designed for either simple or most complex and sophisticated sound-transmitting applications. They combine excellent acoustic parameters and high aesthetics with resistance to mechanical damages and varying weather conditions as well as simple assembling and low price. Quality standards and audio characteristics have been confirmed through tests and trials in an anechoic chamber, resistance and integrity testing equipment, as well as chambers for resistance to weather and air humidity testing.

ABT-T1410/T2015 comprise series comprises highly efficient loudspeakers which produce sounds featuring directional characteristics and operate in any atmospheric conditions (A, B, C environmental type). Thanks to their balanced frequency band they guarantee high understanding of verbal communication. Their casings are made of ABS, a synthetic material featuring high resistance to mechanical damages. Loudspeakers are perfectly protected from dust and humidity (IP66). The assembling jig ensures adjusting the inclination for the optimum coverage of the area of communications.

ABT-T1410/T2015 loudspeakers are applied on circulation routes and inside the rooms with high reverberation time as well as in widespread outdoor area broadcasting. They are perfect for sport sites, at swimming pools, in expo and industrial halls, warehouses, open and underground car parks, and in open areas such as stadiums, parks, etc.

ABT-T loudspeakers entirely comply with global requirements. They have been certified for product compliance with EN 54-24 and acceptance by CNBOP. Ceramic blocks and themal fuses protect the broadcasting line from short-circuits or breaks.

The individual rated power is selected by connection to the appropriate terminal of the ceramic terminal block. All the ABT-T loudspeakers are designed so as to ensure continuous operations at rated parameters for at least 100 hours (consistent with IEC-268-5 Standard). In spite of the fact our loudspeakers are designed for the highest reliability under fire conditions, they can be also used in any and all public address systems.

CHARACTERISTICS

- » ***Directional characteristic of sound emission and the highest verbal communication understanding***
- » ***All the working environments – A, B and C***
- » ***Wall and ceiling installation***
- » ***Protection from dust and humidity: IP66 rating***
- » ***100% line protection from short-circuit and break in fire conditions***

ABT-T2015

ABT-T1410

	ABT-T1410	ABT-T2015
Electrical		
Rated power, W	10	15
Tappings 100 V line according to EN 54-24, W	10 / 5 / 2,5 / 1,25	15 / 7,5 / 3,75 / 1,87
Tappings 70 V line, W	5 / 2,5 / 1,25 / 0,62	7,5 / 3,75 / 1,87 / 0,94
Transformer impedance @ 100 V, Ω	1000 / 2000 / 4000 / 8000	667 / 1330 / 2770 / 5330
Driver impedance, Ω	8	8
Effective frequency range, Hz	400-6300	400-8000
Sensitivity @ 4 m, 1 W, dB	81	87
SPL @ 4 m, rated power, dB	89	97
SPL @ 1 m, 1 W, dB, test signal bandwidth 300 Hz – 6 kHz	93	99
SPL @ 1 m, rated power, dB, test signal bandwidth 300 Hz – 6 kHz	101	109
Dispersion at 500 Hz / 1 kHz / 2 kHz / 4 kHz, [°]	360 / 355 / 97 / 54	360 / 132 / 68 / 33
Environmental		
Environmental type / IP rating according to EN 54-24	B / IP33C	
IP rating	66	
Min. / max. ambient temperature	-25 °C / 70 °C	
Mechanical		
Dimensions, mm	Length 214, ø 140	Length 258, ø 200
Net weight, kg	1,2	1,5
Colour	Light grey (RAL 7035)	
Material	ABS	
Mounting	Screw, U type bracket	
Option		
For DC line monitoring	Capacitor	
EaseModel	✓	

Frequency band:

ABT-T1410

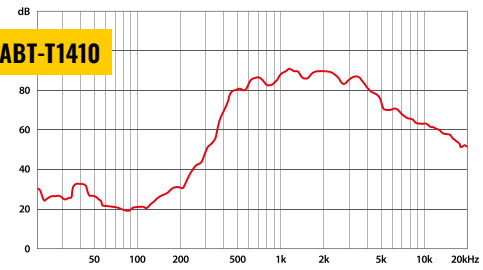

Circular chart of directional characteristic:

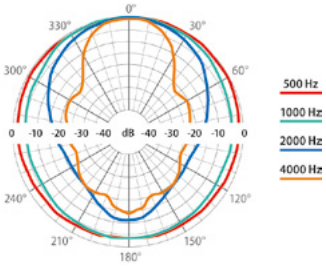

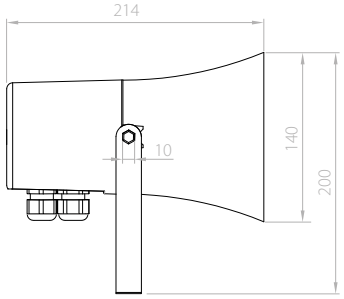

Frequency band:

ABT-T2015

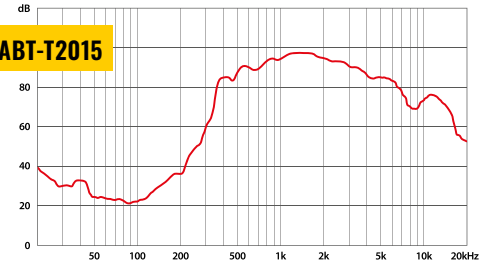

Circular chart of directional characteristic:

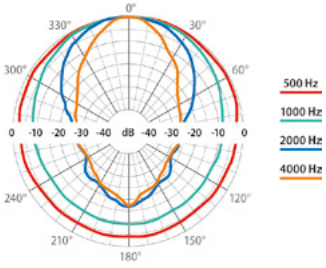

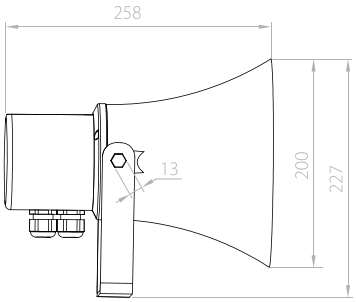

ABT-T1510 / T2215 / T2430 / T2435

EN 54-24

HORN-TYPE LOUDSPEAKERS

- ✓ *Compliance with EN 54-24*
- ✓ *Certificate of Conformity issued by CNBOP: 1438-CPR-0640*
- ✓ *Compliance with BS5839-8 standard (thermal protection)*

Horn-type fire alarm ABT-T loudspeakers are designed for either simple or most complex and sophisticated sound-transmitting applications. They combine excellent acoustic parameters and high aesthetics with resistance to mechanical damages and varying weather conditions as well as simple assembling and low price. Quality standards and audio characteristics have been confirmed through tests and trials in an anechoic chamber, resistance and integrity testing equipment, as well as chambers for resistance to weather and air humidity testing.

The ABT-T series comprises highly efficient loudspeakers which produce sounds featuring directional characteristics and operate in any atmospheric conditions (A, B, C environmental type). Thanks to their balanced frequency band they guarantee high understanding of verbal communication. Their casings are made of ABS UL94V0, a synthetic material featuring high resistance to mechanical damages and self-extinguishing properties. Loudspeakers are perfectly protected from dust and humidity (IP66). The assembling jig ensures adjusting the inclination for the optimum coverage of the area of communications.

ABT-T loudspeakers are applied on circulation routes and inside the rooms with high reverberation time as well as in widespread outdoor area broadcasting. They are perfect for sport sites, at swimming pools, in expo and industrial halls, warehouses, open and underground car parks, and in open areas such as stadiums, parks, etc.
ABT-T loudspeakers entirely comply with global requirements concerning evacuation systems, including the standards such as BS5839 Part 8 and EN 54-24. They have been certified for product compliance and acceptance by CNBOP. Ceramic blocks, internal flame-resistant wiring, and temperature limit fuses protect the broadcasting line from short-circuits or breaks and ensure continuous operations even in case of fire-produced damages or burns. The loudspeaker located in the zone of fire is isolated from the sound-transmitting line. A special design eliminates the risk of fall of any of its burnt components, which ensures safe fire escape process.

Our ABT-T loudspeaker offer comprises four power rating models, i.e. 10 W, 15 W, 30 W and 35 W. The individual rated power is selected by means of connection with applicable transformer branch. All the ABT-T loudspeakers are designed so as to ensure continuous operations at rated parameters for at least 100 hours (consistent with IEC-268-5 Standard). In spite of the fact our loudspeakers are designed for the highest reliability under fire conditions, they can be also used in any and all public address systems.

CHARACTERISTICS

- » ***Directional characteristic of sound emission and the highest verbal communication understanding***
- » ***All the working environments – A, B and C***
- » ***Wall and ceiling installation***
- » ***Protection from dust and humidity: IP66 rating***
- » ***Casing made of self-extinguishing ABS UL94V0 plastic, with steel assembling jig***
- » ***100% line protection from short-circuit and break in fire conditions***

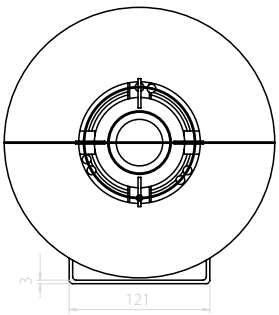

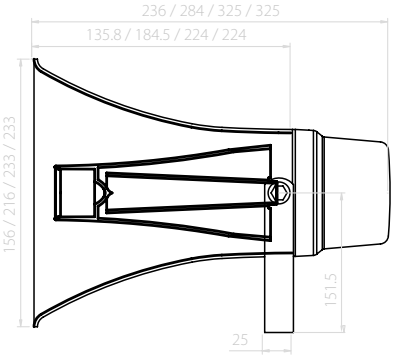

	ABT-T1510	ABT-T2215	ABT-T2430	ABT-T2435
Electrical				
Rated power, W	10	15	30	35
Tappings 100 V line according to EN 54-24, W	10 / 5 / 2,5 / 1,25	15 / 7,5 / 3,75 / 1,87	30 / 15 / 7,5 / 3,75	35 / 17,5 / 8,75 / 4,38
Tappings 70 V line, W	5 / 2,5 / 1,25 / 0,62	7,5 / 3,75 / 1,87 / 0,94	15 / 7,5 / 3,75 / 1,87	17,5 / 8,75 / 4,38 / 2,19
Transformer impedance @ 100 V, Ω	1000 / 2000 / 4000 / 8000	667 / 1330 / 2770 / 5330	333 / 666 / 1330 / 2660	285 / 571 / 1142 / 2284
Driver impedance, Ω	8	8	8	8
Effective frequency range, Hz	340 – 9000	460 – 9000	400 – 7500	400 – 7500
Sensitivity @ 4 m, 1 W, dB	86	87	88	88
SPL @ 4 m, rated power, dB	96	100	103	103
SPL @ 1 m, 1 W, dB, test signal bandwidth 300 Hz – 6 kHz	103	104	105	105
SPL @ 1 m, rated power, dB, test signal bandwidth 300 Hz – 6 kHz	113	116	120	120
Dispersion at 500 Hz / 1 kHz / 2 kHz / 4 kHz, [°]	240 / 200 / 88 / 45	180 / 121 / 68 / 36	180 / 120 / 75 / 41	180 / 120 / 75 / 41
Environmental				
Environmental type / IP rating according to EN 54-24	B / IP33C			
IP rating	66			
Min. / max. ambient temperature	-25 °C / 70 °C			
Mechanical				
Dimensions, mm	Length 236, ø 156	Length 284, ø 216	Length 325, ø 233	Length 325, ø 233
Net weight, kg	1,75	1,95	2,20	2,20
Colour	Light grey (RAL 7035)			
Material	ABS UL94V0			
Mounting	Screw, U type bracket			
Option				
For DC line monitoring	Capacitor			
Ease Model	✓			

Frequency band:

ABT-T1510

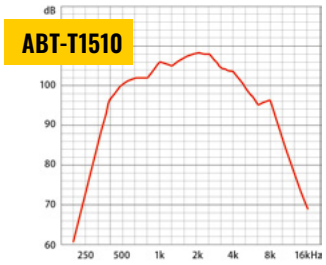

Circular chart of directional characteristic:

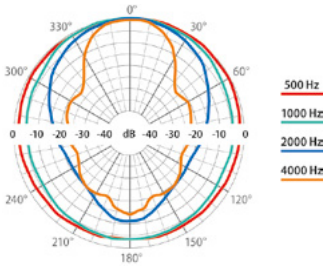

Frequency band:

ABT-T2215

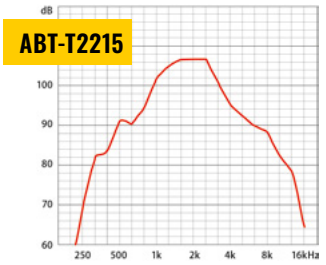

Circular chart of directional characteristic:

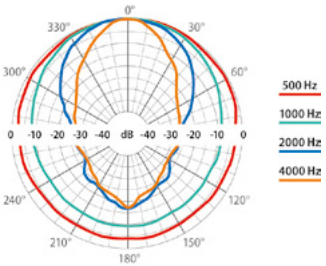

Frequency band:

ABT-T2430

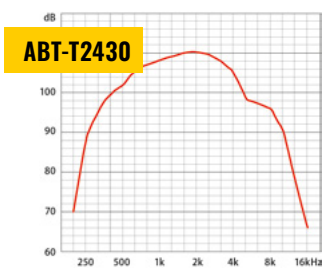

Circular chart of directional characteristic:

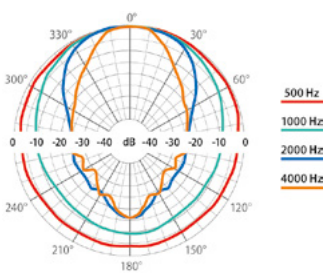

Frequency band:

ABT-T2435

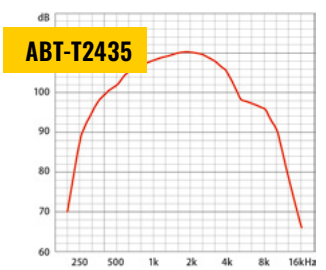

Circular chart of directional characteristic:

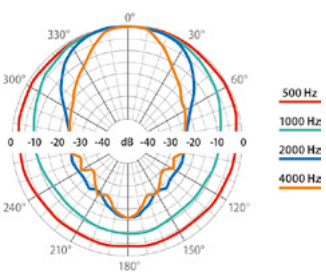

ABT-HP240EN/ABT-HP120EN

EN 54-24

HIGH POWER LOUDSPEAKER

- ✓ *Compliance with EN 54-24*
- ✓ *Certificate of Conformity issued by CNBOP: 1438-CPR-0482*
- ✓ *240 W and 120 W transformers 100 V*
- ✓ *Highest level of speech intelligibility*
- ✓ *Waterproof housing IP65*
- ✓ *Wide frequency range suitable for music*
- ✓ *Compliance with BS5839-8 standard*

ABT-HP240EN and ABT-HP120HP are powerful loudspeakers designed for sport venues. They are two-way loudspeaker equipped with electroacoustic transducers 12" + 1,75" and 8" + 1,3". These speakers sets have a wide effective frequency band, which is perfect for the transmission of verbal and musical communication. Universal mounting method allows to mount the speakers in a simple manner. Waterproof housing makes that it can be successfully used outdoors (stadiums, halls, etc.). ABT-HP240EN and ABT-HP120EN are equipped with the necessary instrumentation required to connect them to the voice evacuation system. Between the ceramic block and speaker transformer there is installed thermal fuse isolating transformer from a loudspeaker line.

ABT-HP240EN

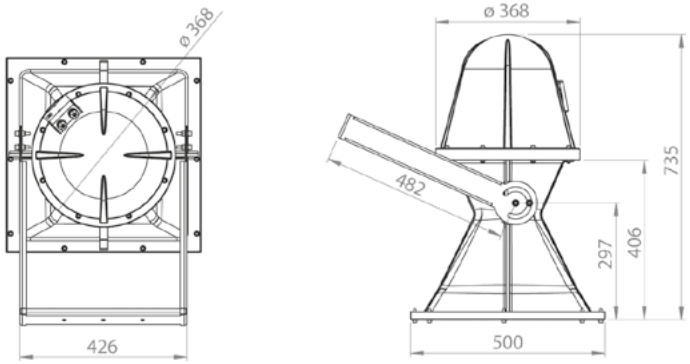

ABT-HP120EN

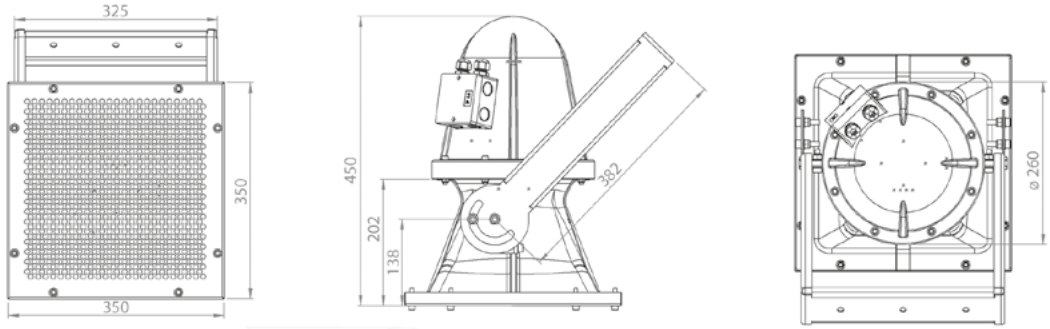

	ABT-HP240EN66	ABT-HP240EN94	ABT-HP120EN66	ABT-HP120EN94
Electrical				
Number of transducers	2	2	2	2
Rated power, W	240	240	120	120
Tappings 100 V line according to EN 54-24, W	240 / 120 / 60	240 / 120 / 60	120 / 60 / 30	120 / 60 / 30
Tappings 70 V line, W	120 / 60 / 30	120 / 60 / 30	60 / 30 / 15	60 / 30 / 15
Transformer impedance @ 100 V, Ω	42 / 84 / 167	42 / 84 / 167	84 / 167 / 333	84 / 167 / 333
Driver impedance, Ω	8	8	8	8
Effective frequency range, Hz	65 – 20 000	65 – 20 000	85 – 20 000	85 – 20 000
Sensitivity @ 4 m, 1 W, dB	84	84	81	81
SPL @ 4 m, rated power, dB	108	108	105	105
SPL @ 1 m, 1 W, dB	96	96	93	93
SPL @ 1 m, rated power, dB	120	120	117	117
Horizontal dispersion at 500 Hz / 1 kHz / 2 kHz / 4 kHz, [°]	110 / 60 / 65 / 55	110 / 60 / 85 / 55	160 / 90 / 45 / 35	165 / 120 / 80 / 60
Vertical dispersion at 500 Hz / 1 kHz / 2 kHz / 4 kHz, [°]	105 / 60 / 65 / 55	105 / 65 / 80 / 65	160 / 90 / 45 / 35	160 / 100 / 65 / 45
Environmental				
Environmental type / IP rating according to EN 54-24	B / IP33C			
IP rating	IP65			
Min./max. ambient temperature	-25°C / 70°C			
Mechanical				
Dimensions, mm	500 × 500 × 735	500 × 500 × 735	350 × 350 × 450	350 × 350 × 450
Net weight, kg	29	29	16	16
Colour	Black (RAL 9005)			
Material	Glass fiber			
Mounting	U type bracket			
Ease Model	✓			

Frequency band:

ABT-HP240EN

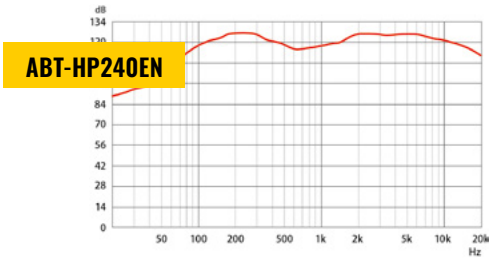

horizontal << circular chart of directional characteristic >> vertical

ABT-HP240EN66

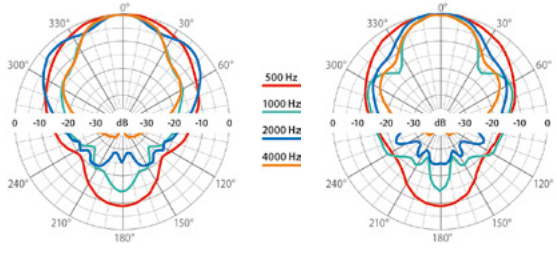

ABT-HP240EN94

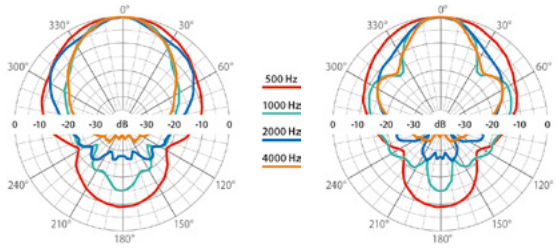

Frequency band:

ABT-HP120EN

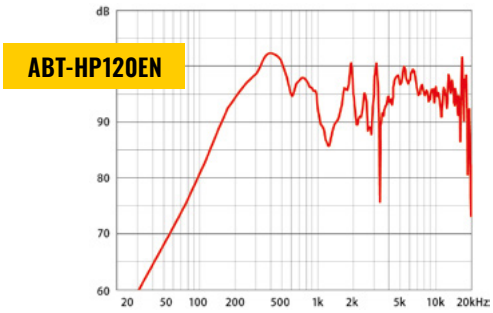

horizontal << circular chart of directional characteristic >> vertical

ABT-HP120EN66

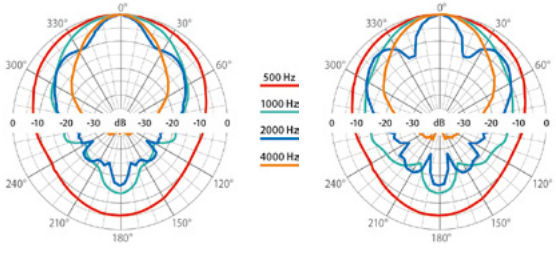

ABT-HP120EN94

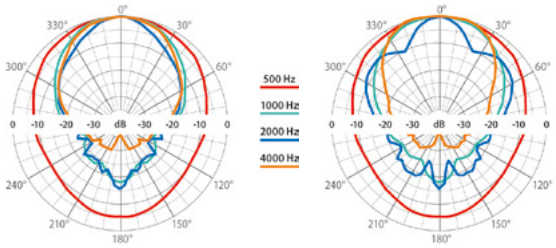

ABT-TNL100

EN 54-24

HIGHLY DIRECTIONAL TUNNEL LOUDSPEAKER

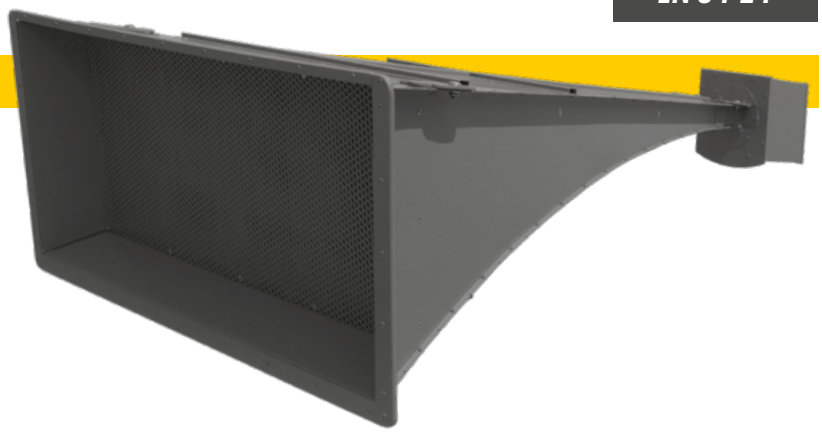

- ✓ *Specially designed for tunnel applications*
- ✓ *Highly directional asymmetric horn*
- ✓ *Excellent speech intelligibility*
- ✓ *Stainless steel construction*
- ✓ *Waterproof housing IP66*
- ✓ *High power output 100 / 50 / 25 W*
- ✓ *Thermal protection*
- ✓ *Certificate of Conformity: 1438-CPR-0778*

In case of an emergency, the Voice Evacuation System needs to guide people in the tunnel to safety so the audio transmission should be as clear as possible. In general, due to high levels of reverberation and noise, a tunnel is not an ideal environment for Voice Evacuation System and therefore speech intelligibility becomes a critical parameter for any voice alarm application.

To establish a sufficient level of speech intelligibility, a highly directional speakers system is required. By reducing the energy emitted to other surfaces, reflective sound energy can be minimized which results in a better direct to reverberant ratio. This will improve the maximum feasible speech intelligibility. To minimize disturbing echo effects, resulting in a loss of speech intelligibility, each horn speaker is driven by an individual signal channel in a 100 V installation, which is equipped with audio DSP including EQ and delay. Our product S4T (Safety For Tunnel) offers the most effective solution which seamlessly combines a dedicated Voice Evacuation System with tailored Tunnel Loudspeakers.

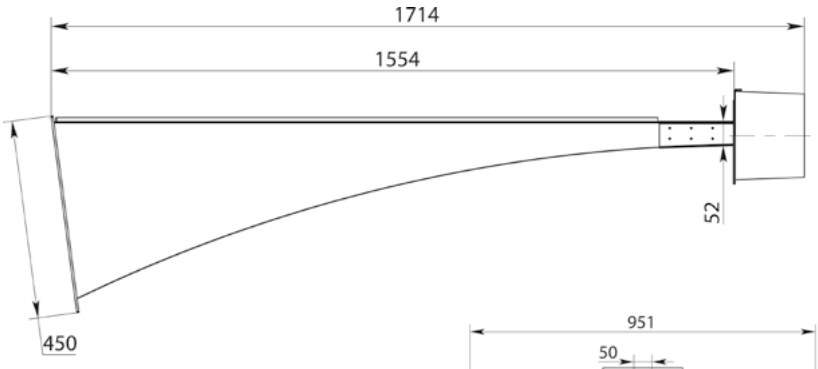

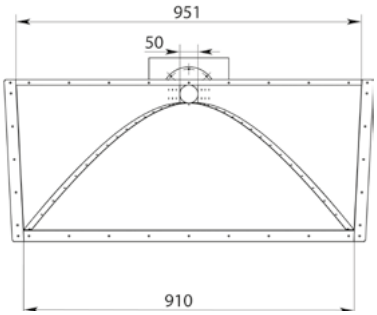

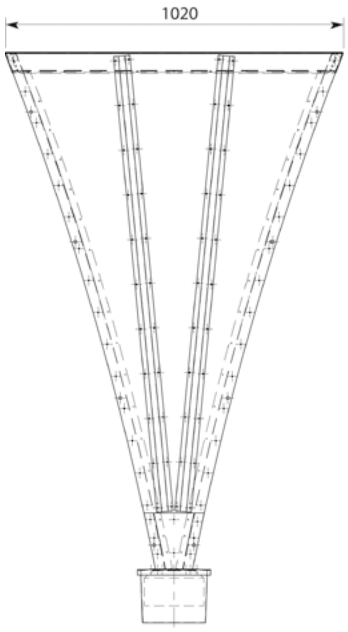

	ABT-TNL100
Electrical	
Rated power, W	100
Tappings 100 V line, W	100 / 50 / 25
Tappings 70 V line, W	50 / 25 / 12,5
Transformer impedance @ 100 V, Ω	100 / 200 / 400
Driver impedance, Ω	6
Effective frequency range, Hz	250 – 8000
Sensitivity @ 4 m, 1 W, dB	99
SPL @ 4 m, rated power, dB	118
SPL @ 1 m, 1 W, dB	111
SPL @ 1 m, rated power, dB	131
Horizontal dispersion at 500 Hz / 1 kHz / 2 kHz / 4 kHz, [°]	27 / 22 / 27 / 21
Vertical dispersion at 500 Hz / 1 kHz / 2 kHz / 4 kHz, [°]	60 / 36 / 21 / 15
Environmental	
Environmental type	B
IP Rating	IP66
Min. / max. ambient temperature	-25°C / 70°C
Mechanical	
Dimensions, mm	1714 × 1020 × 450
Net weight, kg	34,2
Colour	Grey (RAL 7037)
Material	Stainless steel
Mounting	Anchor for concrete
Option	
For DC line monitoring	Capacitor
Colour optional	RAL palette
Ease Model	✓

Frequency band:

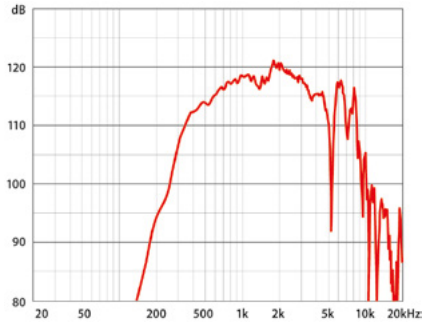

Circular chart of directional characteristic – horizontal:

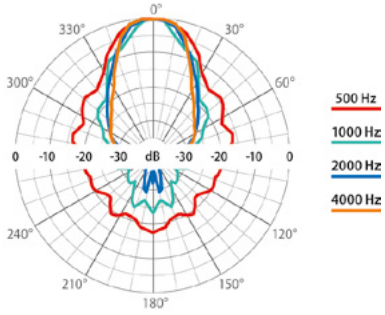

Circular chart of directional characteristic – vertical:

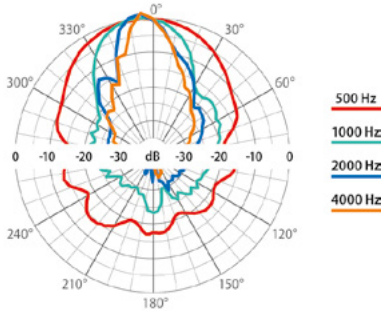

ABT-OMN100

EN 54-24

OMNIDIRECTIONAL LOUDSPEAKER

- ✓ *Specially designed for airpots applications*
- ✓ *Omnidirectional design*
- ✓ *Excellent speech intelligibility*
- ✓ *Aluminium housing*
- ✓ *High power output 100 / 50 / 25 W*
- ✓ *Thermal protection*
- ✓ *Certificate of Conformity: 1438-CPR-XXXX*

The ABT-OMN100 is an omnidirectional pendant loudspeaker with a power output of 100W. It has been specially designed for installation in large-volume spaces such as airport halls, high-bay warehouses, sports halls, shopping centers, train stations, museums, and more. It provides excellent sound quality and meets fire safety requirements. Thanks to its omnidirectional design and wide radiation angles, the speaker enables uniform and effective sound coverage of areas up to 900 m^2. The speaker features high sensitivity, allowing for effective sound coverage of large areas with minimal energy consumption. Its hanging installation and aesthetic appearance make it a perfect fit for various interiors without disrupting their aesthetics. The product complies with the EN 54-24 standard, ensuring its reliability and safety.

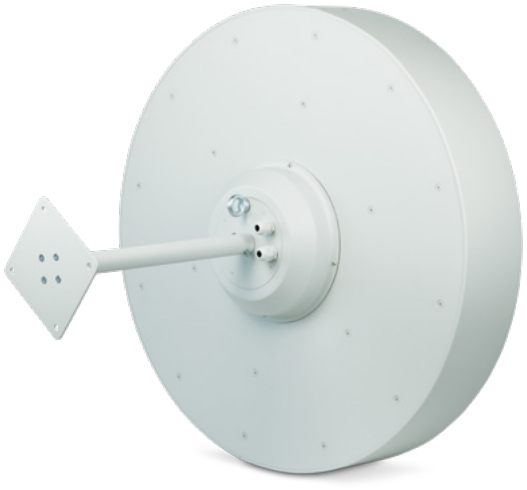

	ABT-OMN100
Electrical	
Rated power, W	100
Tappings 100 V line, W	100 / 50 / 25
Tappings 70 V line, W	50 / 25 / 12,5
Transformer impedance @ 100 V, Ω	100 / 200 / 400
Drivers impedance, Ω	8
Effective frequency range, Hz	60 - 20000
Sensitivity @ 4 m, 1 W, dB	81
SPL @ 4 m, rated power, dB	100
SPL @ 1 m, 1 W, dB	93
SPL @ 1 m, rated power, dB	131
Horizontal dispersion at 500 Hz / 1 kHz / 2 kHz / 4 kHz, [°]	140 / 180 / 160 / 120
Vertical dispersion at 500 Hz / 1 kHz / 2 kHz / 4 kHz, [°]	160 / 160 / 160 / 125
Environmental	
Environmental type	A
IP Rating	IP42
Min. / max. ambient temperature	-10°C / 55°C
Mechanical	
Dimensions, mm	Ø 750 × 400
Net weight, kg	24
Colour	Grey (RAL 7035)
Material	Aluminium
Mounting	Safety wire / mounting bracket
Option	
For DC line monitoring	Capacitor
Colour optional	RAL palette
Ease Model	✓

Frequency band:

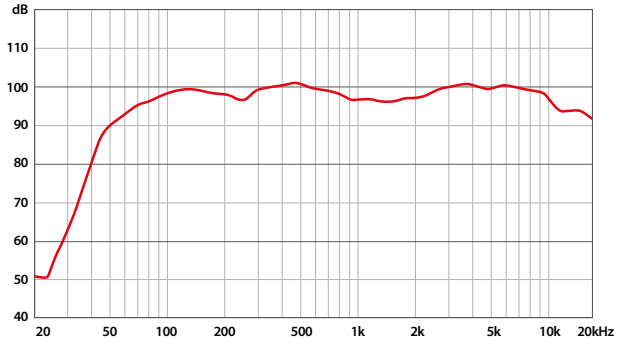

ABT-S226/AB

EN 54-24

CEILING-MOUNTED A/B LOUDSPEAKER

- ✓ *Compliance with EN 54-24*
- ✓ *Certificate of Conformity issued by CNBOP: 1438-CPR-0899*
- ✓ *Compliance with BS5839-8 standard (Thermal protection)*
- ✓ *6-watt transformer enabling precise handling of loudspeaker power*
- ✓ *Optimised level of speech intelligibility*
- ✓ *Operation of two A/B loudspeaker lines*

NEW!

The ceiling-mounted ABT-S226/AB loudspeaker has been designed to guarantee the highest quality of sound even in difficult conditions. ABT-S226/AB is equipped with two in-built drivers, two transformers, two thermal fuses and two ceramic connection blocks , which allow the connection of two independent A/B loudspeaker lines. ABT-S226/AB has been designed for application in rooms of such size and acoustic conditions that the design proposes one ceiling-mounted loudspeaker of VES standard. In case of a single fault on the loudspeaker line, there is no loss of the sound coverage. To be sure that our speakers meet the highest quality standards, we test them thoroughly according to procedures that guarantee excellent sound emission parameters, safety and reliability. The loudspeaker offers adjustable power regulation through connection to applicable transformer tappings thus allowing suitable sound pressure level within areas of sound emission adequately to the character and acoustic conditions existing in those areas.

	ABT-S226/AB
Electrical	
Number of transducers	2
Rated power, W	2 × 6
Tappings 100 V line according to EN 54-24, W	2 × 6 / 3 / 1,5 / 0,75
Tappings 70 V line, W	2 × 3 / 1,5 / 0,75 / 0,37
Transformer impedance, Ω 100 V	2 × 1667 / 3333 / 6666 / 13333
Driver impedance, Ω	8
Effective frequency range, Hz	150 – 20000
Sensitivity @ 4 m, 1 W, dB	75
SPL @ 4 m, Rated power, dB	85
SPL @ 1 m, 1 W, dB, Test signal bandwidth 300 Hz – 6 kHz	89
SPL @ 1 m, Rated power, dB, Test signal bandwidth 300 Hz – 6 kHz	99
Horizontal dispersion at 500 Hz / 1 kHz / 2 kHz / 4 kHz, [°]	180 / 180 / 150 / 110
Vertical dispersion at 500 Hz / 1 kHz / 2 kHz / 4 kHz, [°]	180 / 160 / 80 / 40
Environmental	
Environmental type / IP Rating according to EN 54-24	A / IP21C
IP Rating	32
Min / Max Amb Temp	-10°C / 55°C
Mechanical	
Dimensions, mm	Height 115 mm , ø220
Net Weight, kg	1,8
Colour	White (RAL 9003)
Material	Steel
Mounting	Spring clamp
Option	
For DC line monitoring	Capacitor (ABT-S226C/AB)
Colour optional	RAL Palette
Ease Model	

Circular chart of directional characteristic – horizontal:

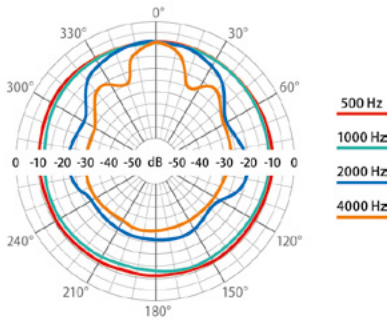

Frequency band:

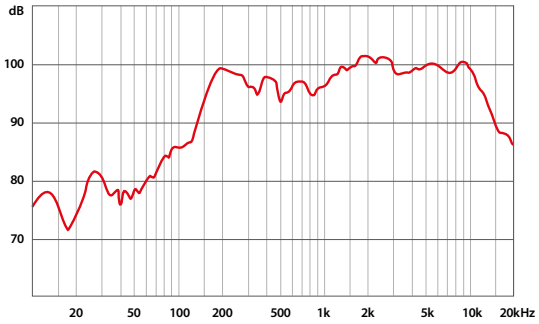

Circular chart of directional characteristic – vertical:

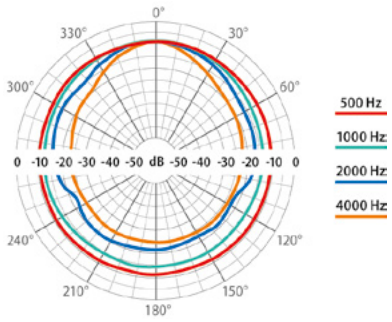

ABT-SW176/AB

EN 54-24

SURFACE MOUNTED AB LOUDSPEAKER

- ✓ *Compliance with EN 54-24*
- ✓ *Certificate of Conformity: 1438-CPR-0885*
- ✓ *Compliance with BS5839-8 standard (thermal protection)*

NEW!

The ABT-SW176/AB is an elegant multi-function loudspeaker designed to guarantee the highest acoustic parameters. The loudspeaker can be mounted either on a wall or on a ceiling.

ABT-SW176/AB is equipped with two in-built drivers, two transformers, two thermal fuses and two ceramic connection blocks , which allow the connection of two independent A/B loudspeaker lines.

Our loudspeakers are perfect on any circulation routes and in staircases located in shopping centres, offices, schools, hotels, hospitals, and industrial buildings.

The loudspeaker mingles well with any interior and is virtually invisible thanks to its small dimensions and neat white finish.

The loudspeaker offers adjustable power regulation through connectivity to applicable transformer tappings thus allowing suitable acoustic pressure (the level of sound) within areas of sound emission adequately to the acoustic conditions existing in those areas.

To be quite sure our loudspeakers comply with the highest quality standards we test them thoroughly following the most meticulous procedures that warrant excellent parameters of sound emission, safety, and reliability. They are also recommended for use in any and all public address systems.

CHARACTERISTICS

- » ***Easy and quick to mount***
- » ***Modern and elegant design***
- » ***High quality sound of both speech and music***
- » ***Ideal for on-wall or on-ceiling mounting***
- » ***6 W transformers with multiple branches ensuring accurate selection of output power***
- » ***Operation of two A/B loudspeaker lines***

	ABT-SW176/AB
Electrical	
Rated power, W	2 x 6
Tappings 100 V line according to EN 54-24, W	2 x 6 / 3 / 1,5 / 0,75
Tappings 70 V line, W	2 x 3 / 1,5 / 0,75 / 0,37
Transformer impedance @ 100 V, Ω	2 x 1667/3333/6667/13333
Driver impedance, Ω	2 x 8
Effective frequency range, Hz	150 – 20 000
Sensitivity @ 4 m, 1 W, dB	74
SPL @ 4 m, rated power, dB	84
SPL @ 1 m, 1 W, dB, test signal bandwith 300 Hz – 6 kHz	86
SPL @ 1 m, rated power, dB, test signal bandwith 300 Hz – 6 kHz	96
Horizontal dispersion at 500 Hz / 1 kHz / 2 kHz / 4 kHz, [°]	360 / 160 / 75 / 40
Vertical dispersion at 500 Hz / 1 kHz / 2 kHz / 4 kHz, [°]	360 / 190 / 130 / 100
Environmental	
Environmental type / IP Rating according to EN 54-24	A / IP21C
IP Rating	32
Min./max. ambient temperature	-10°C / 55°C
Mechanical	
Dimensions, mm	Height 80, ø 170
Net weight, kg	1,26
Colour	White (RAL 9003) / Black (RAL 9011)
Material	Steel
Mounting	Screw
Option	
For DC line monitoring	Capacitor (ABT-SW176C/AB)
Colour optional	RAL palette
Ease Model	

Frequency band:

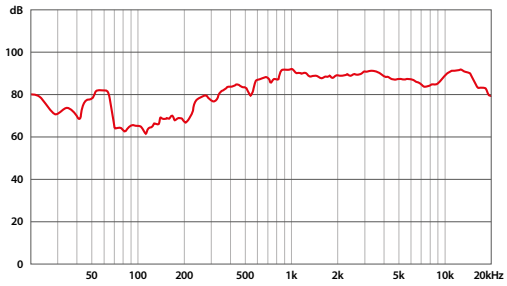

Circular chart of directional characteristic:

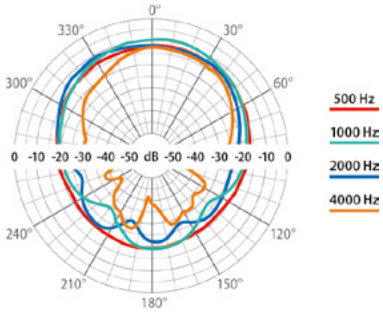

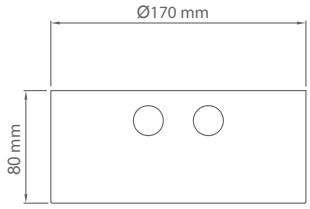

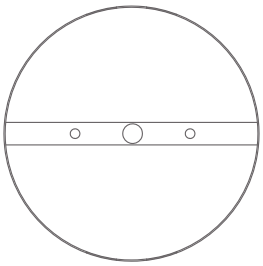

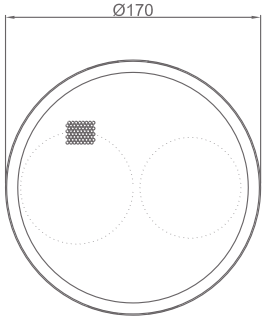

ABT-W6W/AB

EN 54-24

WALL-MOUNTED AB LOUDSPEAKER

- ✓ *Compliance with EN 54-24*
- ✓ *Certificate of Conformity: 1438-CPR-0884*
- ✓ *Compliance with BS5839-8 standard (thermal protection)*

NEW!

The ABT-W6W/AB is an elegant multi-function loudspeaker designed to guarantee the highest acoustic parameters. The loudspeaker can be mounted either on a wall or on a ceiling.

ABT-W6W/AB is equipped with two in-built drivers, two transformers, two thermal fuses and two ceramic connection blocks , which allow the connection of two independent A/B loudspeaker lines.

Our loudspeakers are perfect on any norm and circulation routes and in staircases located in shopping centres, offices, schools, hotels, hospitals, and industrial buildings. he loudspeaker fits well in any interior thanks to its small dimensions and white finish.

The loudspeaker offers adjustable power regulation through connection to applicable transformer tappings thus allowing suitable sound pressure level within areas of sound emission adequately to the acoustic conditions existing in those areas.

To be sure that our speakers meet the highest quality standards, we test them thoroughly according to procedures that guarantee excellent sound emission parameters, safety and reliability. They are also recommended for use in public address systems.

CHARACTERISTICS

- » ***Easy and quick to mount***
- » ***Modern and elegant design***
- » ***High quality sound of both speech and music***
- » ***Ideal for wall installation***
- » ***6 W transformers with multiple branches ensuring accurate selection of output power***
- » ***Operation of two A/B loudspeaker lines***

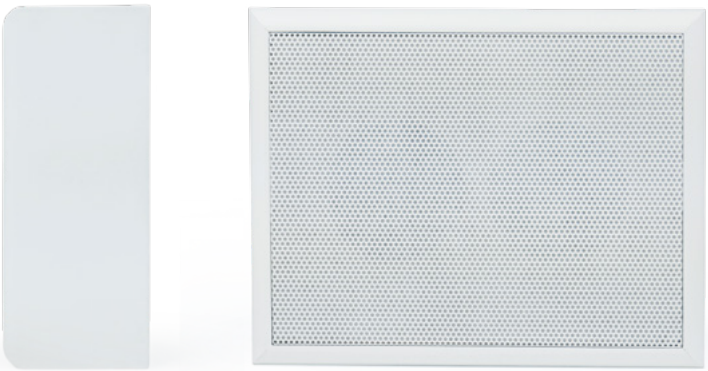

	ABT-W6W/AB
Electrical	
Rated power, W	2 x 6
Tappings 100 V line according to EN 54-24, W	2 x 6 / 3 / 1,5 / 0,75
Tappings 70 V line, W	2 x 3/1,5/0,75/0,37
Transformer impedance @ 100 V, Ω	2 x 1667/3333/6667/13333
Driver impedance, Ω	2 x 8
Effective frequency range, Hz	150 – 20 000
Sensitivity @ 4 m, 1 W, dB	75
SPL @ 4 m, rated power, dB	84
SPL @ 1 m, 1 W, dB, test signal bandwith 300 Hz – 6 kHz	87
SPL @ 1 m, rated power, dB, test signal bandwith 300 Hz – 6 kHz	96
Horizontal dispersion at 500 Hz / 1 kHz / 2 kHz / 4 kHz, [°]	225 / 135 / 70 / 45
Vertical dispersion at 500 Hz / 1 kHz / 2 kHz / 4 kHz, [°]	245 / 190 / 140 / 115
Environmental	
Environmental type / IP rating according to EN 54-24	A / IP21C
IP rating	32
Min. / max. ambient temperature	-10°C / 55°C
Mechanical	
Dimensions, mm	254 × 196 × 78
Net weight, kg	1,99
Colour	White (RAL 9003)
Material	MDF
Mounting	Screw
Option	
For DC line monitoring	Capacitor (ABT-W6WC/AB)
Ease Model	

Frequency band:

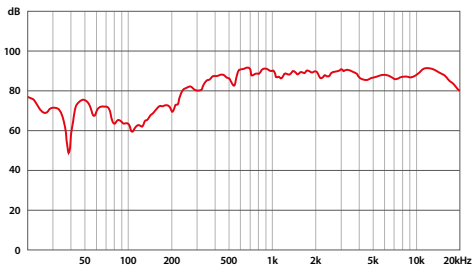

Circular chart of directional characteristic – horizontal:

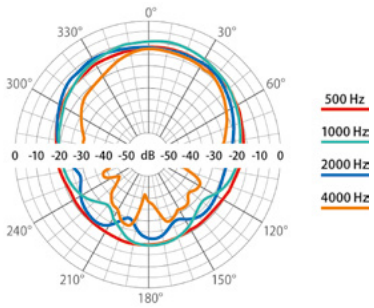

Circular chart of directional characteristic – vertical:

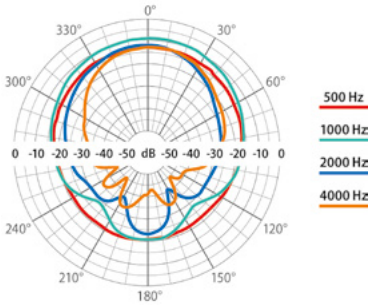

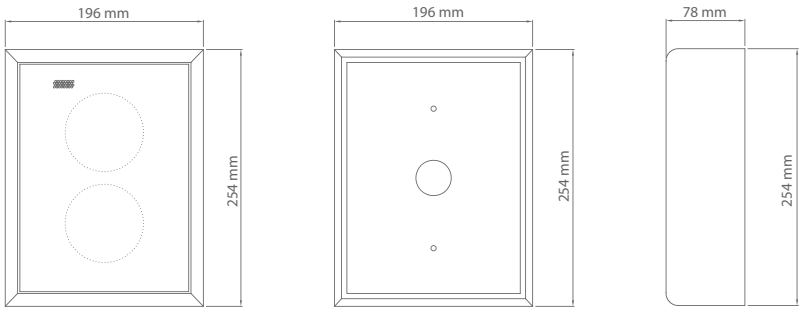

ABT-W6/AB

EN 54-24

WALL-MOUNTED AB LOUDSPEAKER

- ✓ *Compliance with EN 54-24*
- ✓ *Certificate of Conformity issued by CNBOP: 1438-CPR-0413*
- ✓ *Compliance with BS5839-8 standard (thermal protection)*

The ABT-W6/AB is an elegant multi-function loudspeaker designed to guarantee the highest acoustic parameters. Its solid casing offers an effective protection against acts of vandalism. The loudspeaker can be mounted either on a wall or on a ceiling.

Additionally, the ABT-W6/AB loudspeaker can be fixed as an recessed speaker and therefore it is an ideal solution for rooms where aesthetic factors play a significant role.

The loudspeaker offers adjustable power regulation through connectivity to applicable transformer tappings thus allowing suitable acoustic pressure (the level of sound) within areas of sound emission adequately to the acoustic conditions existing in those areas.

Unlike the standard wall-mounted fire alarm loudspeakers; the ABT-W6/AB is equipped with two in-built electro-acoustic transducers, two transformers and two separate sets of ceramic clamps and fuses, which allow connectivity of two independent A/B loudspeaker lines.

ABT-W6/AB has been designed for application in rooms of such size and acoustic conditions that the design proposes one wall-mounted loudspeaker of VES standard. However, in case of a single fault on the loudspeaker line, there is no loss of the sound coverage area in rooms with installed wall-mounted ABT-W6/AB loudspeakers.

CHARACTERISTICS

- » ***Easy and quick to mount***
- » ***Modern and elegant design***
- » ***High quality sound of both speech and music***
- » ***Ideal for on-wall or in-wall mounting***

	ABT-W6/AB
Electrical	
Rated power, W	2×6
Tappings 100 V line according to EN 54-24, W	2× 6/3/1,5/0,75
Tappings 70 V line, W	2× 3/1,5/0,75/0,37
Transformer impedance @ 100 V, Ω	2× 1667/3333/6667/13333
Driver impedance, Ω	2×8
Effective frequency range, Hz	150 – 20 000
Sensitivity @ 4 m, 1 W, dB	84
SPL @ 4 m, rated power, dB	91
SPL @ 1 m, 1 W, dB, test signal bandwith 300 Hz – 6 kHz	97
SPL @ 1 m, rated power, dB, test signal bandwith 300 Hz – 6 kHz	104
Dispersion at 500 Hz / 1 kHz / 2 kHz / 4 kHz, [°]	180 / 165 / 53 / 30
Environmental	
Environmental type / IP rating according to EN 54-24	A / IP21C
IP rating	32
Min./max. ambient temperature	-10°C / 55°C
Mechanical	
Dimensions, mm	260 × 180 × 80
Net weight, kg	2,25
Colour	White (RAL 9003)
Material	Steel
Mounting	Screw
Option	
For DC line monitoring	Capacitor
Colour optional	RAL palette
Ease Model	✓

Frequency band:

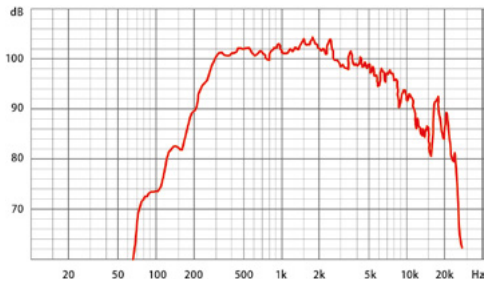

Circular chart of directional characteristic – horizontal:

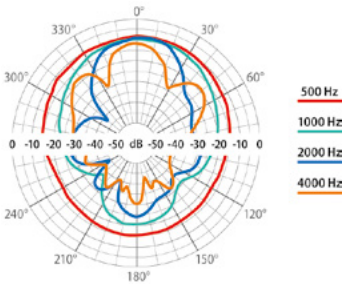

Circular chart of directional characteristic – vertical:

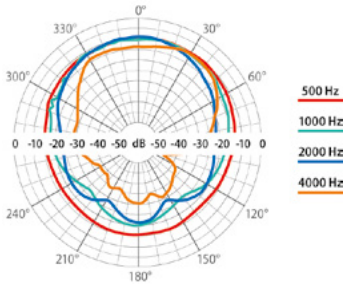

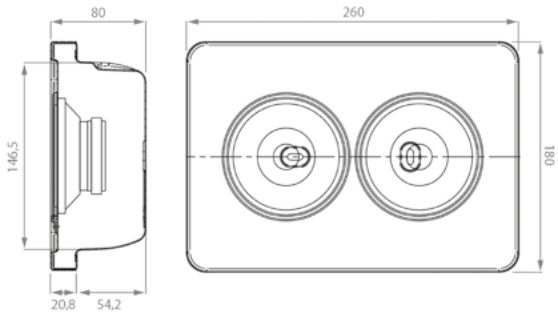

ABT-HP200

HIGH POWER LOUDSPEAKER

- ✓ *Two-way coaxial design*
- ✓ *200 W transformers for 70 V and 100 V*
- ✓ *Highest level of speech intelligibility*
- ✓ *Waterproof housing IP65*
- ✓ *Wide frequency range suitable for music*
- ✓ *Easy installation*

ABT-HP200 is a coaxial two-way Public Address speaker with a power of 200W, designed for operation in 70V and 100V systems. It is ideally suited for use in sports and multifunctional facilities. Its versatility allows for effective sound reinforcement in small stadiums, sports halls, school fields, gymnasiums, and other public spaces requiring clear and evenly distributed sound emission. Thanks to its two-way coaxial design, the speaker offers excellent sound clarity, ensuring natural reproduction of both speech and music. Due to its construction and high efficiency, the speaker provides full coverage of the sound-reinforced area, offering balanced sound with even response across both high and low frequencies. It is designed to operate in harsh weather conditions, making it an ideal choice for outdoor installation in stadiums and similar venues.

	ABT-HP200
Electrical	
Number of transducers	2
Rated power, W	200
Tappings 100 V, W	200 / 100 / 50 / 25
Tappings 70 V line, W	200 / 100 / 50 / 25
Transformer impedance @ 100 V, Ω	50 / 100 / 200 / 400
Driver impedance, Ω	8
Effective frequency range, Hz	70 - 20 000
Sensitivity @ 4 m, 1 W, dB	82
SPL @ 4 m, rated power, dB	104
SPL @ 1 m, 1 W, dB	94
SPL @ 1 m, rated power, dB	116
Horizontal dispersion at 500 Hz / 1 kHz / 2 kHz / 4 kHz, [°]	160 / 140 / 120 / 100
Vertical dispersion at 500 Hz / 1 kHz / 2 kHz / 4 kHz, [°]	160 / 140 / 120 / 100
Environmental	
IP rating	IP65
Min. / max. ambient temperature	-25°C / 70°C
Mechanical	
Dimensions, mm	385 x 355 x 348
Net weight, kg	29
Colour	Black (RAL 9005)
Material	ABS
Mounting	U type bracket
Ease Model	✓

Frequency band:

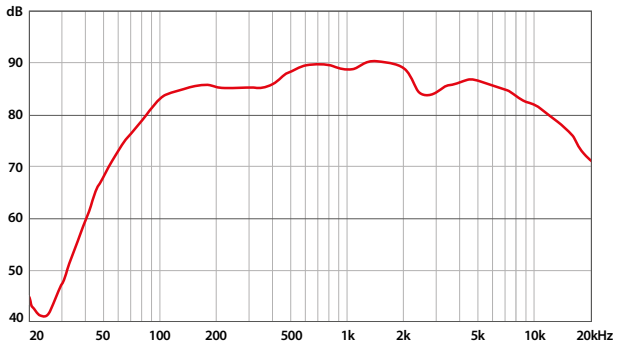

ABT-BS140 / ABT-BS220

ACTIVE BEAM STEERING LINE ARRAY

- ✓ *Excellent Speech Intelligibility*
- ✓ *Bandwidth 130Hz-20kHz for enhanced music reproduction*
- ✓ *Both line input and high impedance input level for 100V*
- ✓ *Adjustable sound beam*
- ✓ *Suitable for daisy chain installations*
- ✓ *Limiter, noise gate, 10-band parametric EQ, delay line*

ABT-BS140 and ABT-BS220 are digitally beam steering line arrays, which have been specially designed to meet the most stringent requirements for the reproduction of the sound for both speech and music.

They are aimed at large-volume rooms and reverberant acoustic environments, where meeting speech intelligibility requirements can be very challenging.

Thanks to the use of a multi-channel digital signal processor DSP, the implemented algorithms will modify the directivity of the emitted sound and model the shape of the acoustic beam, adapting it to the acoustic conditions in the audience area.

Using the beam steering feature, these line arrays will reach large distances with a highly uniform sound pressure level precisely covering a greater area per speaker.

ABT-BS line arrays are perfect for facilities such as airports, railway stations, sports venues, exhibition halls, shopping malls, places of worship etc.

The line arrays can be controlled via the DSP ABT-BS INT interface, to programme the appropriate configuration and settings for the required directivity and frequency characteristics in real time. These settings are saved in the internal memory of each column. This enables quick and easy configuration of the entire system during the commissioning process.

	ABT-BS140	ABT-BS220
Electrical		
Rated power, W	140	220
Effective frequency range, Hz	130 - 20 000	120 - 20 000
Loudspeakers	9 x 3,3"	15 x 3,3"
Dome tweeters	3 x 1"	4 x 1"
DSP channel	8	16
Class D power amplifier	8 x 20 W	16 x 20 W
SPL @ 1 m, rated power, dB	113	119
SPL @ 4 m, rated power, dB	101	107
Max SPL , rated power, dB	95 @ 15m	95 @ 25m
Horizontal dispersion at 500 Hz / 1 kHz / 2 kHz / 4 kHz, [°]	360 / 180 / 140 / 110	360 / 180 / 140 / 100
Vertical dispersion, [°]	6 ÷ 14	6 ÷ 14
DSP	Limiter, noise gate, 10-band parametric EQ, delay line	
Audio inputs		
Line input level [dB]	0	
100V input level [dB]	+ 50	
Line input impedance [kΩ]	15	
100V input impedance [kΩ]	40	
Power supply		
Power supply, V AC	230	
Power consumption, W	15 ÷ 160	30 ÷ 280
Mechanical		
Dimensions, H x W x D, mm	900 x 95 x 119	1450 x 95 x 113
Net weight, kg	4,6	5,8
Color	White (RAL 9016)	
Material	Aluminium	
Option		
Color optional	RAL Palette	

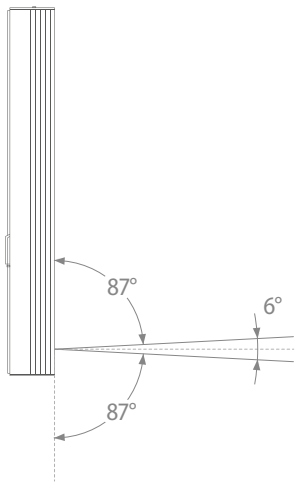

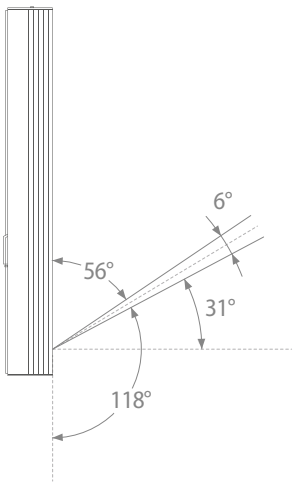

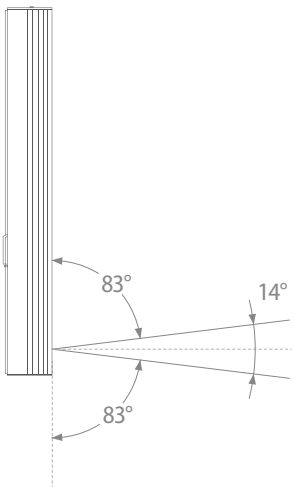

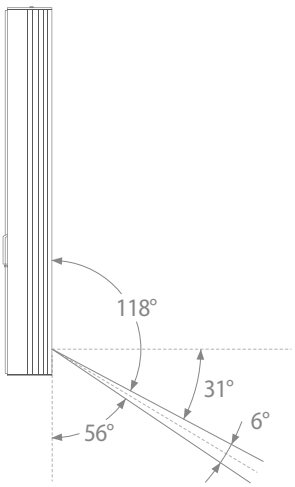

ABT-S206F

CEILING-MOUNTED LOUDSPEAKER

✓ *Speaker tested to comply with the requirements of the Dynamic Passenger Information System for railways*

ABT-S206F are Type A loudspeakers designed to meet the requirements for the Dynamic Passenger Information System for railways.

The ABT-S206F loudspeakers are designed to operate at high sound pressure levels with maximum reduction in required power. The actual high efficiency of the speakers over a wide bandwidth guarantees the highest speech intelligibility.

The parameters of the speakers have been carefully selected for operation in ceilings suspended ceilings at standard height, as well as in cases where the distance to the ceiling is much higher.

ABT-S206F loudspeakers combine excellent acoustic parameters with high aesthetics, resistance to mechanical damage and changes atmospheric conditions. They have a high degree of protection against environmental parameters IP54 and mechanical impact IK07.

CHARACTERISTICS

- » ***Highest level of speech intelligibility***
- » ***6-watt transformer allowing precise selection of the speaker power***
- » ***Modern and elegant design***
- » ***High quality sound of both speech and music***

	ABT-S206F
Electrical	
Rated power, W	6
Tappings 100 V line, W	6 / 3 / 1,5 / 0,75
Tappings 70 V line, W	3 / 1,5 / 0,75 / 0,38
Effective frequency range, Hz	150 – 15000*
SPL @ 4 m, Rated power, dB	86
SPL @ 1 m, 1 W, dB	91
SPL @ 1 m, Rated power, dB	99
Dispersion at 500 Hz / 1 kHz / 2 kHz / 4 kHz, [°]	180 / 180 / 160 / 85
Environmental	
Environmental type	Type A
IP rating	IP54
Min. / max. ambient temperature	-10°C / 55°C
Mechanical	
Dimensions, mm	ø 204 x 130
Colour	White, RAL palette
Material	Metal
Mounting	Spring clamp
Impact Protection	IK07
Cut-out, mm	ø 170

Frequency band:

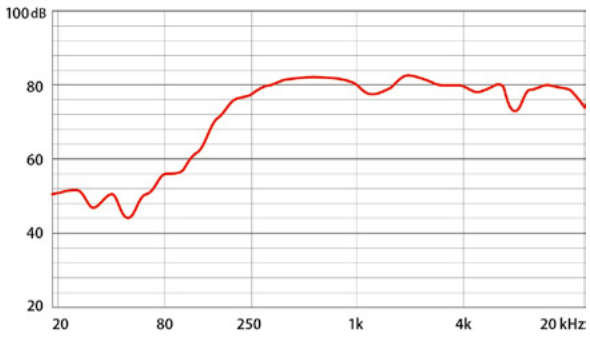

Circular chart of directional characteristic:

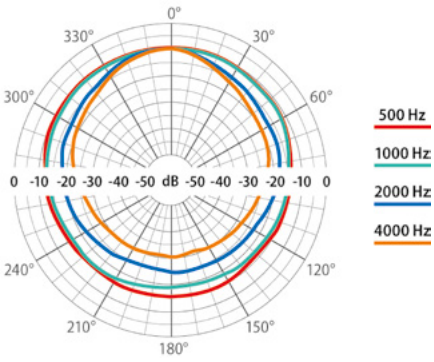

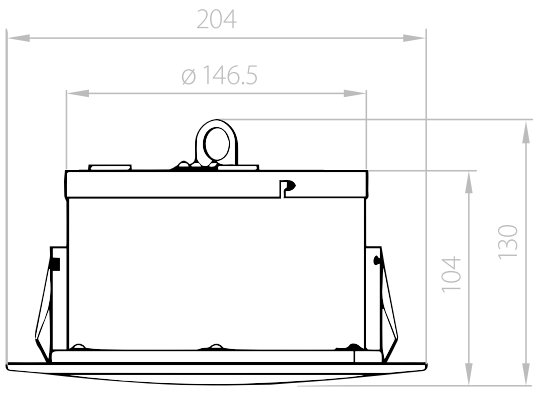

ABT-W6F

WALL-MOUNTED LOUDSPEAKER

✓ *Speaker tested to comply with the requirements of the Dynamic Passenger Information System for railways*

ABT-W6F are Type A loudspeakers designed to meet the requirements for the Dynamic Passenger Information System for railways.

The ABT-W6F loudspeaker is an elegant multifunction loudspeaker designed to ensure the highest acoustic parameters. A solid, durable housing protects the loudspeaker against acts of vandalism.

It has a high degree of protection with the environmental parameters IP44 and mechanical impact IK07.

The loudspeaker is designed for wall or on ceiling mounting. In addition, it has the option of flush mounting, which makes it perfect for interior spaces where high aesthetics is required.

The loudspeaker has the possibility of power adjustment by connecting to the appropriate transformer tap, thanks to which it will be possible to properly adjust the sound pressure level, according to the acoustic conditions.

CHARACTERISTICS

- ***Highest level of speech intelligibility***
- ***6-watt transformer allowing precise selection of the speaker power***
- ***Modern and elegant design***
- ***High quality sound of both speech and music***
- ***Ideal for on-wall or in-wall mounting***
- ***Easy and quick to mount***

	ABT-W6F
Electrical	
Rated power, W	6
Tappings 100 V line, W	6 / 3 / 1,5 / 0,75
Tappings 70 V line, W	3 / 1,5 / 0,75 / 0,37
Effective frequency range, Hz	150 – 15000*
SPL @ 4 m, Rated power, dB	85
SPL @ 1 m, 1 W, dB	94
SPL @ 1 m, Rated power, dB	101
Dispersion at 500 Hz / 1 kHz / 2 kHz / 4 kHz, [°]	180 / 180 / 163 / 80
Environmental	
Environmental type	Type A
IP rating	IP44
Min. / max. ambient temperature	-10°C / 55°C
Mechanical	
Dimensions, mm	260 × 180 × 80
Colour	White, RAL palette
Material	Metal
Impact Protection	IK07
Cut-out, mm	Screws

Frequency band:

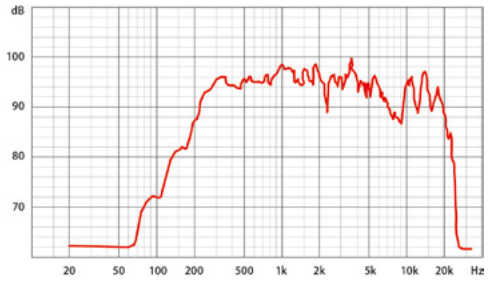

Circular chart of directional characteristic – horizontal:

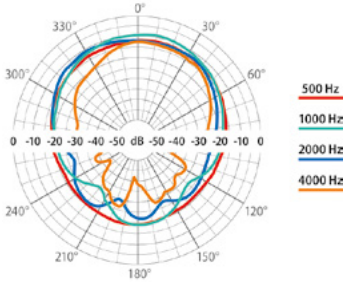

Circular chart of directional characteristic – vertical:

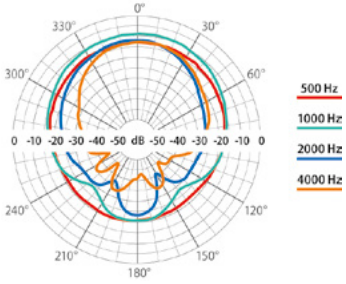

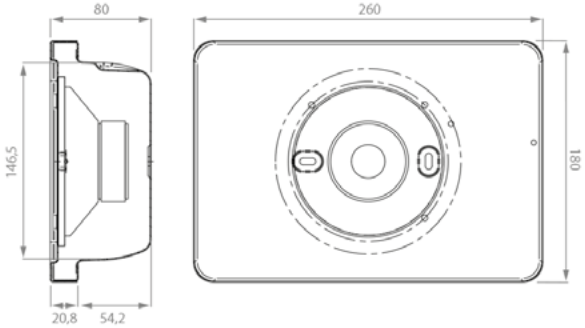

ABT-P20A

ACTIVE SOUND PROJECTOR WITH BUILT-IN 20 W AMPLIFIER

- ✓ *High sound quality in music and speech emission*
- ✓ *Protection from dust and humidity: IP65 rating*
- ✓ *Internal volume control*
- ✓ *Aluminium housing*

NEW!

ABT-P20A is an active sound projector loudspeaker with a built-in 20 W amplifier designed to work with security systems. It is an ideal choice for applications in security systems, industrial and commercial systems in both outdoor and indoor areas such as train stations, airports, parking lots, parks, gardens, corridors and much more. Built-in 20 W amplifier powered with 12 V voltage has an audio line-in input. It allows to connect the speaker directly to CCTV camera. Built-in internal volume control of gain allows you to choose the appropriate volume level of the broadcast message. The high quality of the reproduced sound will be ideal for broadcasting speech as well as music. The durable aluminium housing guarantees increased resistance to adverse weather conditions provided by the IP65 rating.

	ABT-P20A
Electrical	
Rated power of amplifier	20 W
Input impedance	10 kΩ
Power supply	DC 12 V / 2 A
Signal gain	8 dB, 16 dB, 24 dB, 32 dB
Volume adjustment	Internal volume control
Effective frequency range	130 Hz – 20 kHz
Dispersion at 1 kHz	230°
SPL (20 W @ 1 m)	100 dB
Environmental	
IP rating	IP65
Min./max. ambient temperature	-20°C / 55°C
Mechanical	
Dimensions	Length 210, ø 143 mm
Net weight	2,1 kg
Colour	White (RAL 9003)
Material	Aluminium
Mounting	U type bracket
Accessories	
Power Supply	12 VDC / 2 A / 24 W

Frequency band:

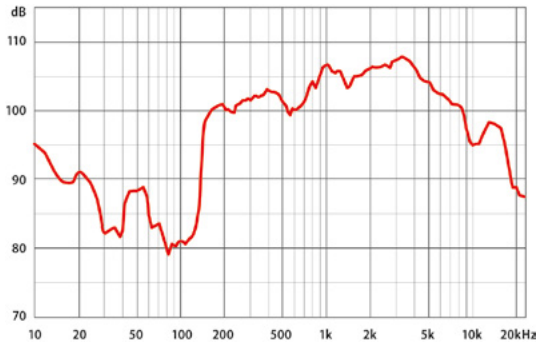

Circular chart of directional characteristic:

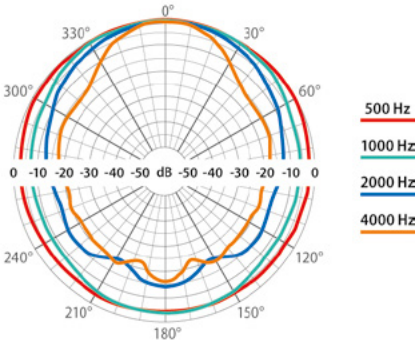

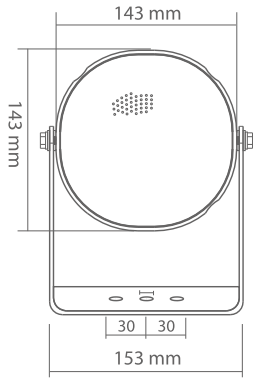

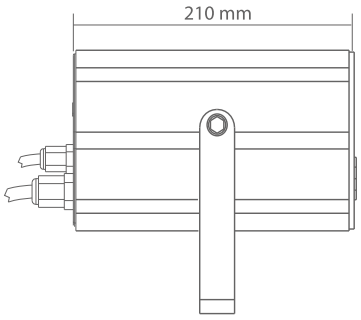

ABT-T2520A

ACTIVE HORN LOUDSPEAKER WITH BUILT-IN 20 W AMPLIFIER

- ✓ *High sound pressure level*
- ✓ *Protection from dust and humidity: IP65 rating*
- ✓ *Internal volume control*

ABT-T2520A is an active horn loudspeaker with a built-in 20 W amplifier designed to work with security systems. It is an ideal choice for applications in security systems, industrial and commercial systems in both outdoor and indoor areas such as train stations, airports, parking lots, parks, gardens, corridors and much more. Built-in 20 W amplifier powered with 12 V voltage has an audio line-in input. It allows to connect the speaker directly to CCTV camera. Built-in internal volume control of gain allows you to choose the appropriate volume level of the broadcast message. The high efficiency and directionality of the loudspeaker allow broadcasting voice messages directly to even distant places, while ensuring a high sound pressure level. The durable housing guarantees increased resistance to adverse weather conditions provided by the IP65 rating.

	ABT-T2520A
Electrical	
Rated power of amplifier	20 W
Input impedance	10 kΩ
Power supply	DC 12 V / 2 A
Signal gain	8 dB, 16 dB, 24 dB, 32 dB
Volume adjustment	Internal volume control
Effective frequency range	350 Hz – 9 kHz
Dispersion at 1 kHz	110°
SPL (20 W @ 1 m)	112 dB
Environmental	
IP rating	IP65
Min./max. ambient temperature	-20°C / 55°C
Mechanical	
Dimensions	292 × 215 × 326 mm
Net weight	2,1 kg
Colour	Light grey (RAL 7035)
Material	ABS
Mounting	U type bracket
Accessories	
Power Supply	12 VDC / 2 A / 24 W

Frequency band:

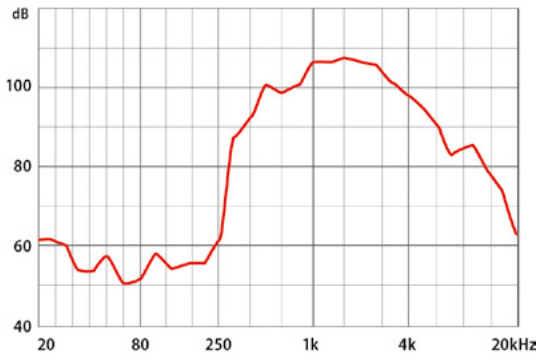

Circular chart of directional characteristic:

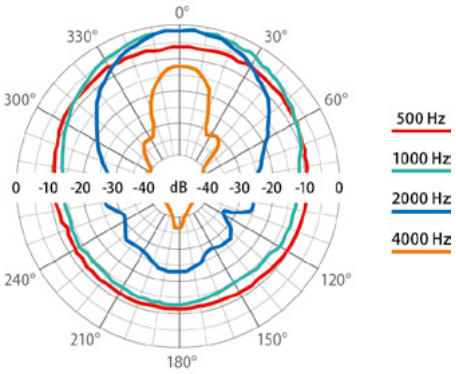

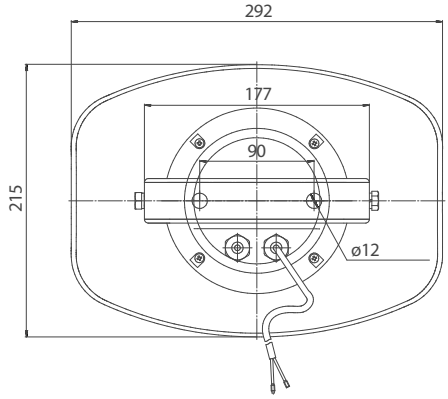

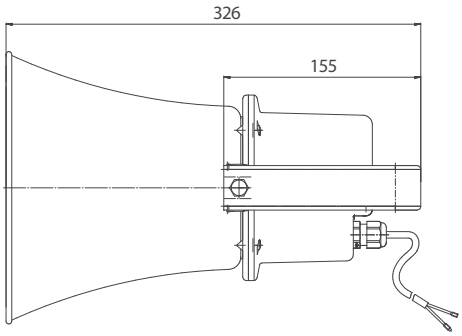

ABT-TNL100-1

HIGHLY DIRECTIONAL TUNNEL LOUDSPEAKER

- ✓ *Specially designed for tunnel applications*
- ✓ *Highly directional asymmetric horn*
- ✓ *Excellent speech intelligibility*
- ✓ *Stainless steel construction*
- ✓ *Waterproof housing IP66*
- ✓ *High power output 100 / 50 W*
- ✓ *Thermal protection*

In case of an emergency, the Voice Evacuation System needs to guide people in the tunnel to safety so the audio transmission should be as clear as possible. In general, due to high levels of reverberation and noise, a tunnel is not an ideal environment for Voice Evacuation System and therefore speech intelligibility becomes a critical parameter for any voice alarm application.

To establish a sufficient level of speech intelligibility, a highly directional speakers system is required. By reducing the energy emitted to other surfaces, reflective sound energy can be minimized which results in a better direct to reverberant ratio. This will improve the maximum feasible speech intelligibility. To minimize disturbing echo effects, resulting in a loss of speech intelligibility, each horn speaker is driven by an individual signal channel in a 100 V installation, which is equipped with audio DSP including EQ and delay. Our product S4T (Safety For Tunnel) offers the most effective solution which seamlessly combines a dedicated Voice Evacuation System with tailored Tunnel Loudspeakers.

CEILING MOUNTING

WALL MOUNTING

	ABT-TNL100-1
Electrical	
Rated power, W	100
Tappings 100 V line, W	100 / 50
Tappings 70 V line, W	50 / 12,5
Transformer impedance @ 100 V, Ω	100 / 200
Driver impedance, Ω	8
Effective frequency range, Hz	250 – 8000
Sensitivity @ 4 m, 1 W, dB	96
SPL @ 4 m, 1 W, dB	116
SPL @ 1 m, 1 W, dB	108
SPL @ 1 m, rated power, dB	128
Horizontal dispersion at 500 Hz / 1 kHz / 2 kHz / 4 kHz, [°]	141 / 66 / 29 / 49
Vertical dispersion at 500 Hz / 1 kHz / 2 kHz / 4 kHz, [°]	192 / 117 / 59 / 47
Environmental	
Environmental type	B
IP Rating	IP66
Min. / max. ambient temperature	-25°C / 70°C
Mechanical	
Dimensions, mm	729 × 365 × 253
Net weight, kg	14,5
Colour	Grey (RAL 7037)
Material	Stainless steel
Mounting	U type bracket
Option	
For DC line monitoring	Capacitor
Colour optional	RAL palette
Ease Model	✓

Frequency band:

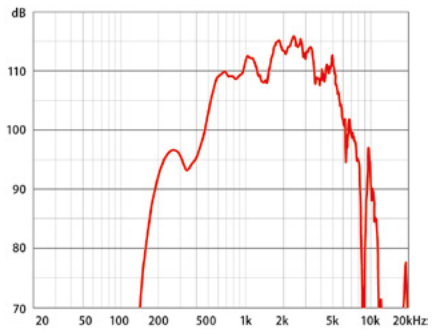

Circular chart of directional characteristic – horizontal:

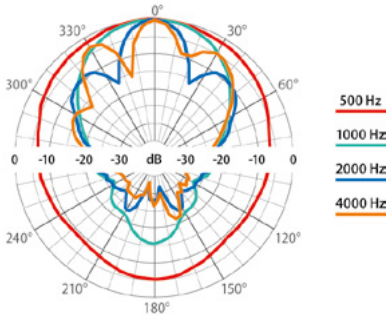

Circular chart of directional characteristic – vertical:

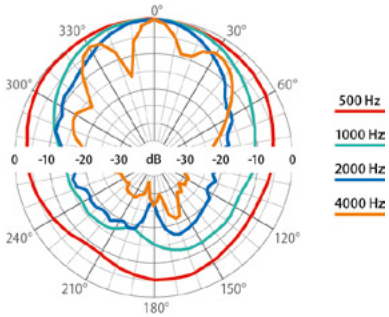

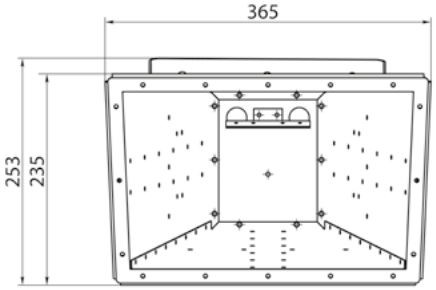

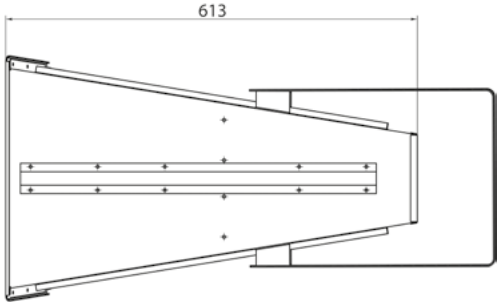

ETH20MD Loud

EXPLOSION PROOF LOUDSPEAKER

- ✓ *Full compliance with directive 2014/34/UE*
- ✓ *Full compliance with:*
  EN 60079-0:2012/A11:2013,
  EN 60079-1:2014, EN 60079-31:2014
- ✓ *Ex db IIB+H2 Gb Ex tb IIIC Db II2GD T6 T5*
- ✓ *Ex db IIC Gb Ex tb IIIC Db II2GD T6 T5*
- ✓ *Zone 1, zone 2, zone 21, zone 22*

The explosion-proof loudspeakers ETH20MD LOUD series have been designed for use in potentially explosive atmospheres in presence of explosive gases and dusts. They have a high degree of protection (IP66) to withstand the harsh off-shore and on-shore plants environmental conditions. They are suitable for connection to standard amplification system with output 100 V, to alarm systems and for public address.

The chamber of acoustic compression is separated from the outer atmosphere through a special filter of sintering. They are equipped with a transformer offering the possibility to adapt and select the sound level according to the real needs of the installation point.

Body, cover and horn cone in aluminium alloy. Adjustable galvanized steel bracket. Bolts and screws in stainless steel. Epoxy coating RAL 7000. Selectable power.

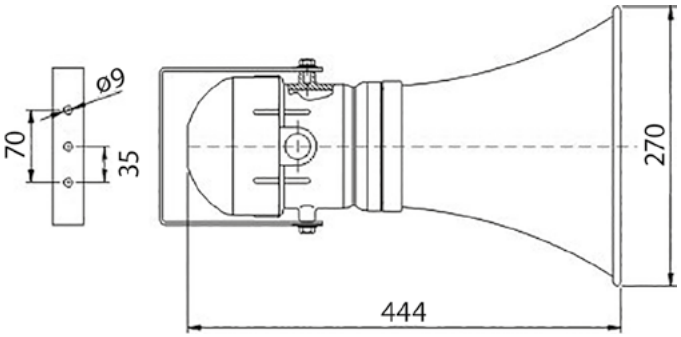

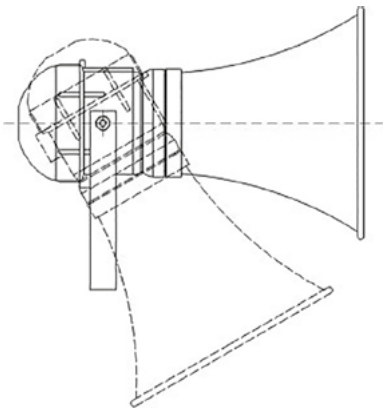

	ETH20MD LOUD
Electrical features	
Selectable power	6 W – 12 W – 20 W – 25 W
Rated voltage	100 V
Audio line	16 Ω
Output	100 ÷ 102 dB @ 6 W 104 ÷ 106 dB @ 12 W 107 ÷ 108 dB @ 20 W 109 ÷ 112 dB @ 25 W
Frequency range	650 ÷ 10 000 Hz @ 6 W 450 ÷ 9000 Hz @ 12 W 400 ÷ 9000 Hz @ 20 W 350 ÷ 10 000 Hz @ 25 W
Environmental	
IP rating	IP66
Min./max. ambient temperature	-20°C / 60°C
Mechanical	
Material	Light alloy body, cover and horn cone
Installation	Adjustable galvanized steel lugs
Hardware	Stainless steel
Gaskets	EPDM
Cable entry	N° 1 Ø 3/4"
Weight	3,5 kg

Outdoor loudness distribution polar diagram:

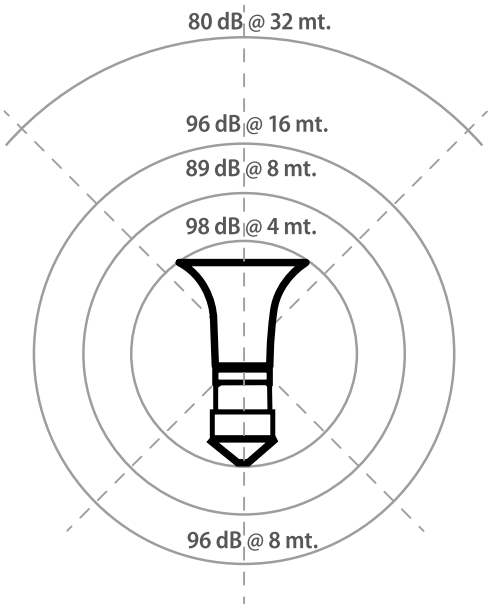

ETHY20MD Loud

EXPLOSION PROOF LOUDSPEAKER STAINLESS STEEL 316

- ✓ *Full compliance with directive 2014/34/UE*
- ✓ *Full compliance with:*
  EN 60079-0:2012/A11:2013,
  EN 60079-1:2014, EN 60079-31:2014
- ✓ *Ex de mb IIB+H2 Gb Ex mb tb IIIC Db II2GD T6 T5*
- ✓ *Ex de mb IIC Gb Ex mb tb IIIC Db II2GD T6 T5*
- ✓ *Zone 1, zone 2, zone 21, zone 22*

The explosion-proof loudspeakers ETHY20MD LOUD series have been designed for use in potentially explosive atmospheres in presence of explosive gases and dusts. They have a high degree of protection (IP66) to withstand the harsh off-shore and on-shore plants environmental conditions. They are suitable for connection to standard amplification system with output 100 V, to alarm systems and for public address.

The chamber of acoustic compression is separated from the outer atmosphere through a special filter of sintering. They are equipped with a transformer offering the possibility to adapt and select the sound level according to the real needs of the installation point.

Body, cover and horn cone in stainless steel 316. Adjustable stainless steel 316 bracket. Bolts and screws in stainless steel 316. Epoxy coating RAL 7000. Selectable power.

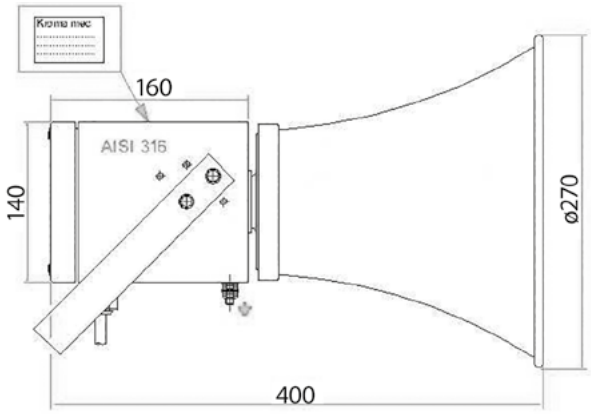

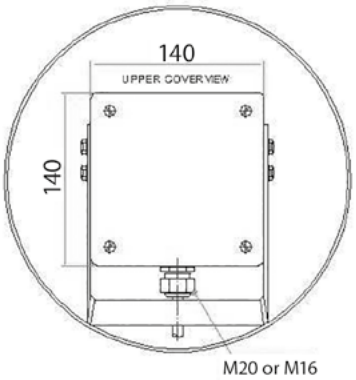

	ETHY20MD LOUD
Electrical features	
Selectable power	6 W – 12 W – 20 W – 25 W
Rated voltage	100 V
Audio line	16 Ω
Output	100 ÷ 102 dB @ 6 W 104 ÷ 106 dB @ 12 W 107 ÷ 108 dB @ 20 W 109 ÷ 112 dB @ 25 W
Frequency range	650 ÷ 10 000 Hz @ 6 W 450 ÷ 9000 Hz @ 12 W 400 ÷ 9000 Hz @ 20 W 350 ÷ 10 000 Hz @ 25 W
Environmental	
IP rating	IP66
Min./max. ambient temperature	-20°C / 60°C
Mechanical	
Material	Body, cover and horn cone in stainless steel 316
Installation	Adjustable stainless steel 316 bracket
Hardware	Stainless steel
Gaskets	Silicone
Cable entry	N° 2 Ø M20
Weight	7 kg

Outdoor loudness distribution polar diagram:

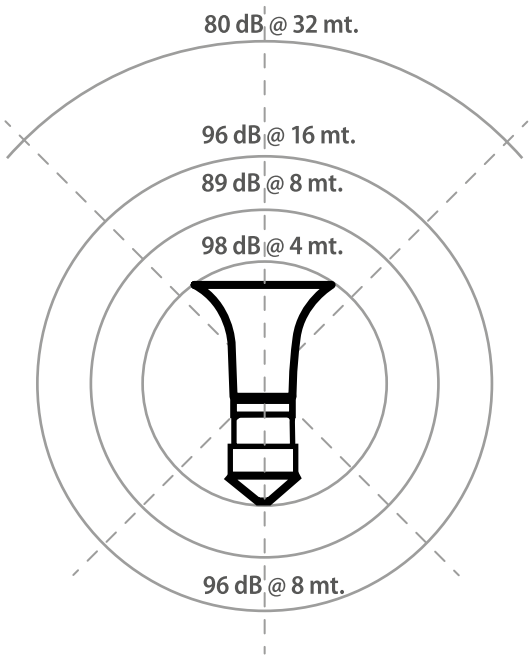

ETH20MD Loud 24/48 VDC

EXPLOSION PROOF LOUDSPEAKER WITH 24/48 VDC AMPLIFIER

- ✓ *Full compliance with directive 2014/34/UE*
- ✓ *Full compliance with:*
  EN 60079-0:2012/A11:2013,
  EN 60079-1:2014, EN 60079-31:2014
- ✓ *Incorporate amplifier 24/48 VDC*
- ✓ *Acoustic pressure a 1 m*
  maximum power 112 dB
- ✓ *Ex db IIB+H2 Gb Ex tb IIIC Db II2GD T6 T5*
- ✓ *Ex db IIC Gb Ex tb IIIC Db II2GD T6 T5*
- ✓ *Zone 1, zone 2, zone 21, zone 22*

The explosion-proof loudspeakers ETH20MD LOUD 24/48 VDC series have been designed for use in potentially explosive atmospheres in presence of explosive gases and dusts. They have a high degree of protection (IP66) to withstand the harsh offshore and on-shore plants environmental conditions. They are equipped with a class D audio amplifier powered at 24/48 VDC, to alarm systems and for public address. The chamber of acoustic compression is separated from the outer atmosphere through a special filter of sintering.

Possibility to select the sound level according to the real needs of the installation site. (4 power steps are available).

Body, cover and horn cone in aluminium alloy. Adjustable galvanized steel bracket. Bolts and screws in stainless steel. Epoxy coating RAL 7000. Selectable power.

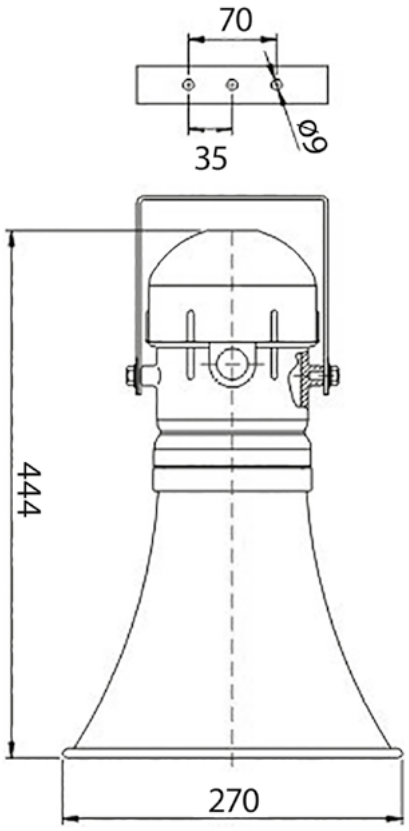

	ETH20MD LOUD 24/48 VDC
Features transducer	
Work power	25 W
Maximum power	40 W
Impedance 1 kHz	8 Ω
Environmental	
IP rating	IP66
Min./max. ambient temperature	-20°C / 60°C
Class D audio amplifier	
Input signal	0 dB at 600 8 Ω
Input sensitivity	40 mV / 150 kΩ
Power supply	from 24 VDC to 48 VDC
Absorption at maximum power	0.8 A @ 48 V - 1.2 A @ 24 VDC
Piloting	8 Ω loudspeakers
Output power	30 W
Total harmonic distortion + noise	(f = 1 kHz, PO = 20 W) 0.2%
Signal report / noise	(f = 1 kHz, Gain = 20 dB) 102 dB
Power regulation	adjustable with trimmer from zero to maximum power of the set step
Power step	4 power steps are available, selectable by SW1 dip-switch Step 1 (gain 20 db) = 1.57 W Step 2 (gain 26 db) = 5.4 W Step 3 (gain 32 db) = 21.5 W Step 4 (gain 36 db) = 30.4 W
Frequency response	from 20 Hz to 20 kHz

Frequency band:

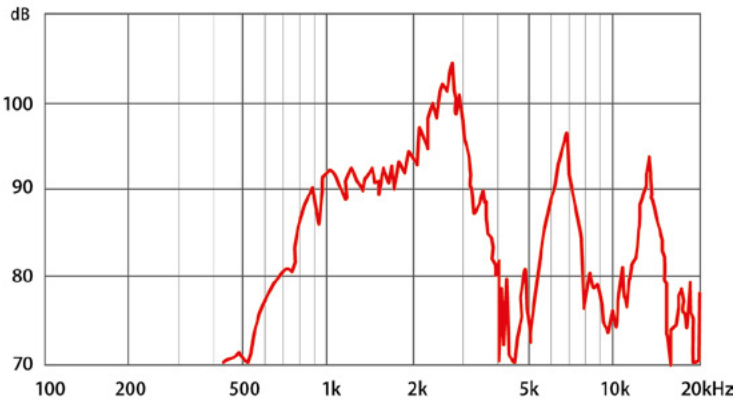

ETH20MD Loud 24/48 VDC Special

EXPLOSION PROOF LOUDSPEAKER WITH 24/48 VDC AMPLIFIER

- ✓ *Full compliance with directive 2014/34/UE*
- ✓ *Full compliance with:*
  EN 60079-0:2012/A11:2013,
  EN 60079-1:2014, EN 60079-31:2014
- ✓ *Incorporate amplifier 24 / 48 VDC*
- ✓ *Acoustic pressure a 1 m*
  maximum power 112 dB
- ✓ *Ex db IIB+H2Gb Ex tb IIIC Db II2GD T6 T5*
- ✓ *Ex db IIC Gb Ex tb IIIC Db II2GD T6 T5*
- ✓ *Zone 1, zone 2, zone 21, zone 22*

The explosion-proof loudspeakers ETH20MD LOUD 24/48 VDC series have been designed for use in potentially explosive atmospheres in presence of explosive gases and dusts. They have a high degree of protection (IP66) to withstand the harsh off-shore and on-shore plants environmental conditions. They are equipped with a class D audio amplifier powered at 24/48 VDC, to alarm systems and for public address. The chamber of acoustic compression is separated from the outer atmosphere through a special filter of sintering.

Possibility to select the sound level according to the real needs of the installation site. (4 power steps are available).

Body, cover and horn cone in aluminium alloy. Adjustable galvanized steel bracket. Bolts and screws in stainless steel. Epoxy coating RAL 9005. Selectable power.

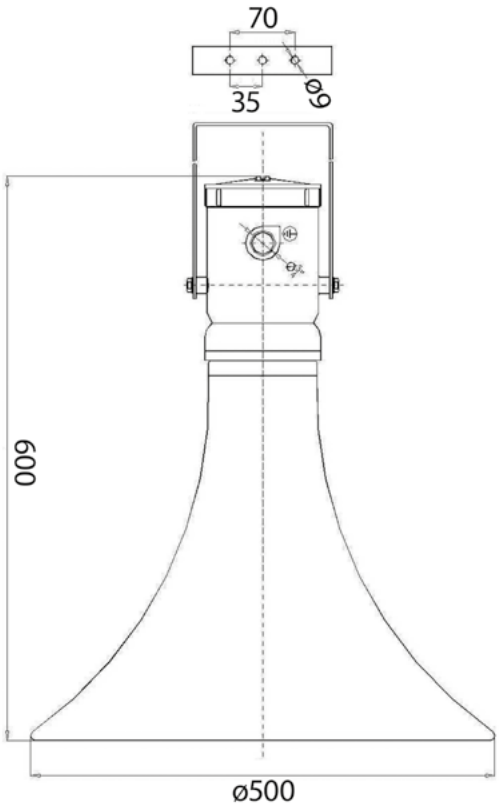

	ETH20MD Loud 24/48 VDC Special
Features transducer	
Work power	25 W
Maximum power	40 W
Impedance 1 kHz	8 Ω
Environmental	
IP rating	IP66
Min./max. ambient temperature	-20°C / 60°C
Class D audio amplifier	
Input signal	0 dB at 600 8 Ω
Input sensitivity	40 mV / 150 kΩ
Power supply	from 24 VDC to 48 VDC
Absorption at maximum power	0.8 A @ 48 V - 1.2 A @ 24 VDC
Piloting	8 Ω
Output power	30 W
Total harmonic distortion + noise	(f = 1 kHz, PO = 20 W) 0.2%
Signal report / noise	(f = 1 kHz, Gain = 20 dB) 102 dB
Power regulation	adjustable with trimmer from zero to maximum power of the set step
Power step	4 power steps are available, selectable by SW1 dip-switch Step 1 (gain 20 db) = 1.57 W Step 2 (gain 26 db) = 5.4 W Step 3 (gain 32 db) = 21.5 W Step 4 (gain 36 db) = 30.4 W
Frequency response	from 20 Hz to 20 kHz

Frequency band:

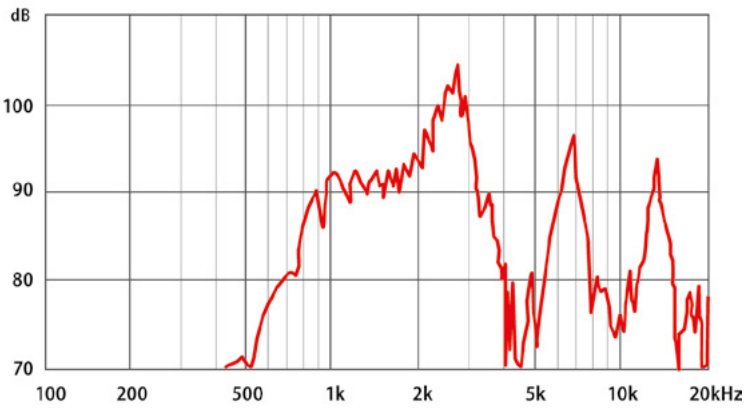

ABT-S206S

SIP CEILING LOUDSPEAKER

- ✓ *Powered ceiling loudspeaker*
- ✓ *Quick and simple installation*

The ABT-S206S is a SIP recessed ceiling loudspeaker with built-in amplifier. The loudspeaker can be powered via PoE or using a DC adapter. It is dedicated for security and safety applications, allowing it to interface to intercom systems, PSIM software, VMS, CCTV systems and other, directly via TCP/IP network.

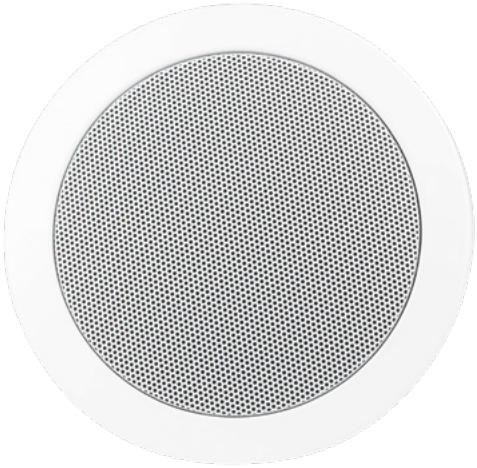

	ABT-S206S
Electrical	
Rated power	6 W
Network interface	10/100BASE-TX, RJ45
Power supply	DC 12 – 24 V or POE
Decoding mode	Max. 48 kHz, 320 kbps audio stream, support MP3, G.711 a/u, G.722. min. delay: 50 ms
Effective frequency range	120 Hz – 20 000 Hz
Dispersion at 1 kHz	180°
SPL (6 W @ 1 m)	99 dB
Environmental	
IP rating	IP32
Min./max. ambient temperature	-20°C / 55°C
Mechanical	
Dimensions	Height 130 mm, ø 204 mm
Net Weight	1,1 kg
Colour	White (RAL 9003)
Material	Steel
Mounting	Spring clamp
Accessories	
Power supply	12 VDC / 2 A / 24 W

Frequency band:

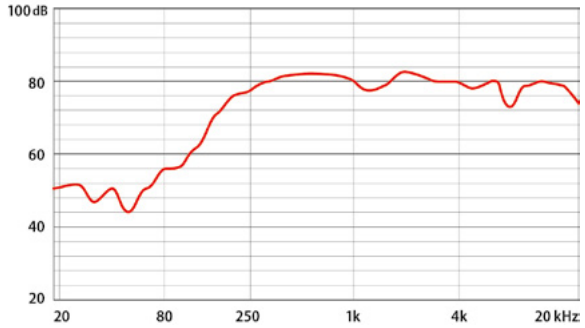

Circular chart of directional characteristic:

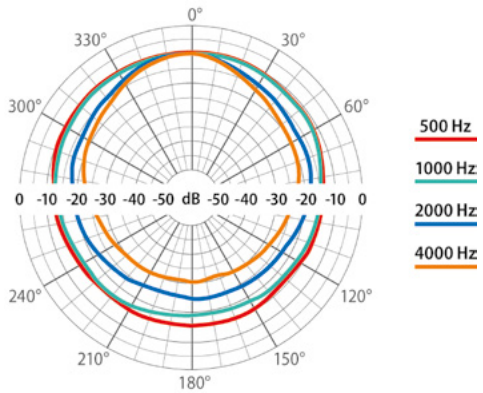

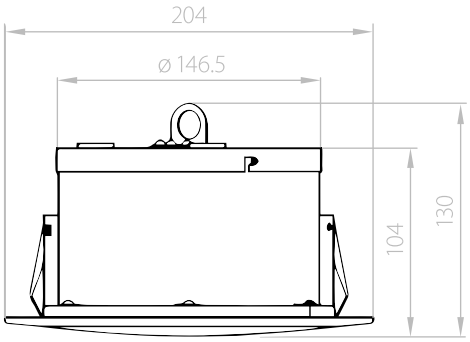

ABT-W6S

SIP WALL-MOUNTED LOUDSPEAKER

- ✓ *Powered cabinet loudspeaker*
- ✓ *Suitable for wall and ceiling installation*

The ABT-W6S is a cabinet loudspeaker with a metal enclosure. The loudspeaker is designer for on-wall and/or on-ceiling installation, with the option for recessed installation (using an accessory bracket). The loudspeaker is fitter with a built-in power amplifier and SIP module, allowing it to interface directly with SIP-based life safety and security systems.

	ABT-W6S
Electrical	
Rated power	6 W
Network interface	10/100BASE-TX, RJ45
Power supply	DC 12 – 24 V or POE
Decoding mode	Max. 48 kHz, 320 kbps audio stream, support MP3, G.711 a/u, G.722. min. delay: 50 ms
Effective frequency range	120 Hz – 20 000 Hz
Dispersion at 1 kHz	180°
SPL (6 W @ 1 m)	101 dB
Environmental	
IP rating	IP32
Min./max. ambient temperature	-20°C / 55°C
Mechanical	
Dimensions	260 × 180 × 80 mm
Net weight	1,5 kg
Colour	White (RAL 9003)
Material	Steel
Mounting	Screw
Accessories	
Power Supply	12 VDC / 2 A / 24 W

Frequency band:

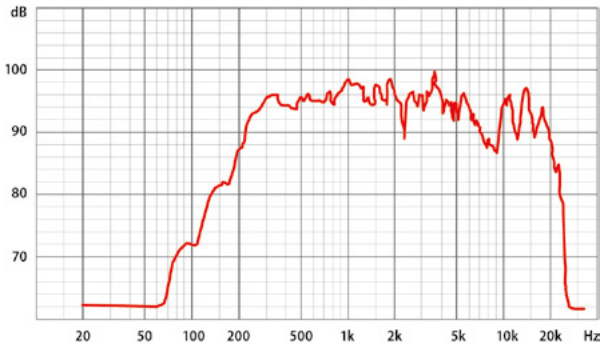

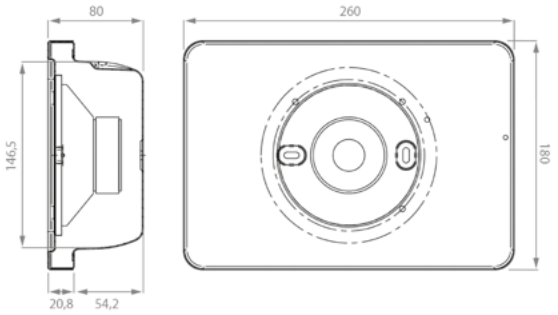

Circular chart of directional characteristic – horizontal:

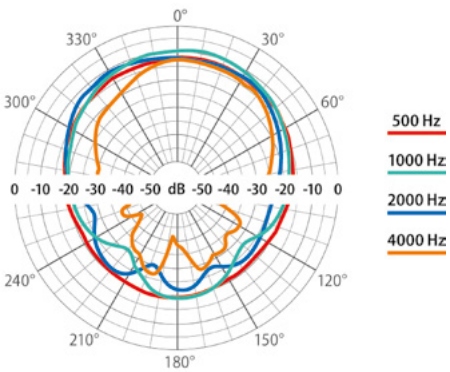

Circular chart of directional characteristic – vertical:

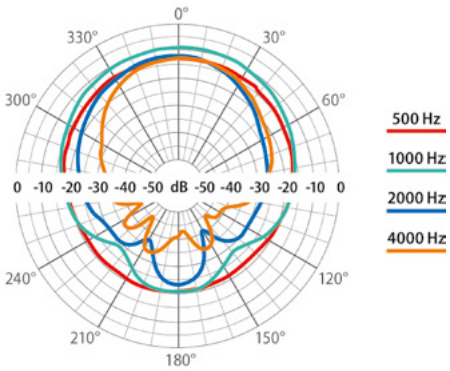

ABT-T2515S

SIP HORN LOUDSPEAKER WITH BUILT-IN 15 W AMPLIFIER

- ✓ *High sound pressure level*
- ✓ *Aluminium housing*
- ✓ *Protection from dust and humidity: IP65 rating*

ABT-T2515S is a SIP horn loudspeaker with a built-in 15 W amplifier. It can be powered by PoE that allows to easily connect it to existing local area networks using one CAT5 / CAT6 cable connection. It is an ideal choice for applications in security systems, industrial and commercial systems in both outdoor and indoor areas such as train stations, airports, parking lots, parks, gardens, corridors and much more. The high efficiency and directionality of the loudspeaker allow broadcasting voice messages directly to even distant places, while ensuring a high sound pressure level. The aluminium housing guarantees increased resistance to adverse weather conditions provided by the IP65 rating.

	ABT-T2515S
Electrical	
Rated power of amplifier	15 W
Network interface	10/100BASE-TX, RJ45
Power supply	DC 12 – 24 V or POE
Decoding mode	Stereo playing, max. 48 kHz, 320 kbps audio stream, support MP3, WAV (PCM +IMA ADPCM), G.711 a/u, G.722., min. delay: 50 ms
Encoding mode	G.711a/u, G.722 and RTP mode, min. delay: 30 ms
Effective frequency range	350 Hz – 7 kHz
Dispersion at 1 kHz	110°
SPL (15 W @ 1 m)	111 dB
Environmental	
IP rating	IP65
Min./max. ambient temperature	-20°C / 55°C
Mechanical	
Dimensions	250 × 320 mm
Net weight	2,3 kg
Colour	Light grey (RAL 7035)
Material	Aluminium
Mounting	U type bracket
Accessories	
Power Supply	12 VDC / 2 A / 24 W

Frequency band:

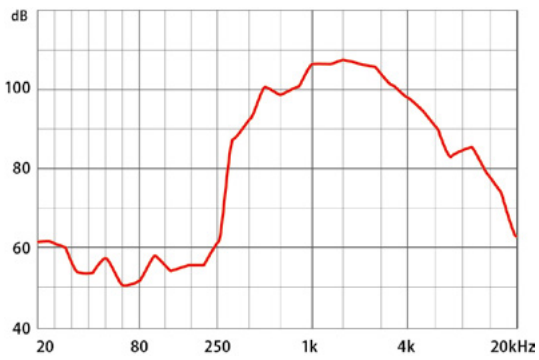

Circular chart of directional characteristic:

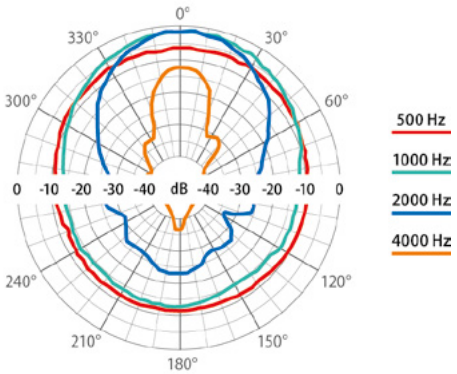

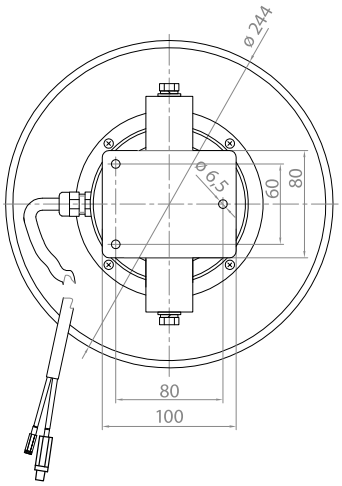

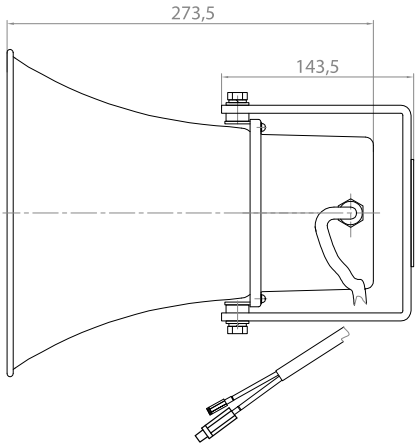

ABT-W6W/PA

WALL-MOUNTED LOUDSPEAKER

- ✓ *Easy and quick to mount*
- ✓ *Modern and elegant design*
- ✓ *High quality sound of both speech and music*
- ✓ *Ideal for wall installation*
- ✓ *6 W transformer with multiple tappings ensuring accurate selection of output power*

	ABT-W6W/PA
Electrical	
Rated power, W	6
Tappings 100 V line according to EN 54-24, W	6 / 3 / 1,5 / 0,75
Tappings 70 V line, W	3 / 1,5 / 0,75 / 0,37
Effective frequency range, Hz	130 – 20 000
SPL @ 1 m, 1 W, dB	90
SPL @ 1 m, rated power, dB	96
Horizontal dispersion at 500 Hz / 1 kHz / 2 kHz / 4 kHz, [°]	320 / 160 / 95 / 70
Vertical dispersion at 500 Hz / 1 kHz / 2 kHz / 4 kHz, [°]	290 / 140 / 100 / 70
Environmental	
IP rating	32
Min. / max. ambient temperature	-10°C / 55°C
Mechanical	
Dimensions, mm	254 × 196 × 78
Net weight, kg	1,8
Colour	White (RAL 9003)
Material	MDF
Mounting	Screw

Frequency band:

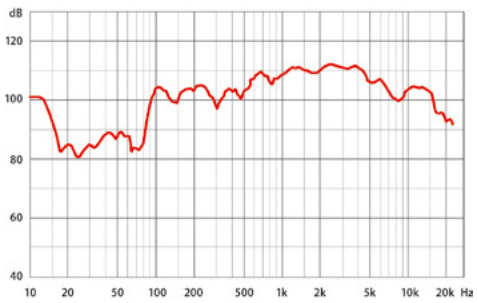

Circular chart of directional characteristic – horizontal:

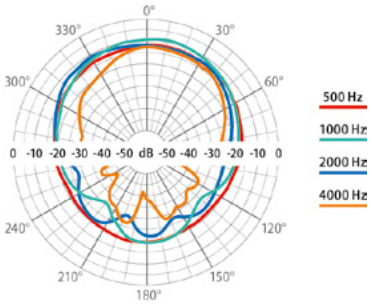

Circular chart of directional characteristic – vertical:

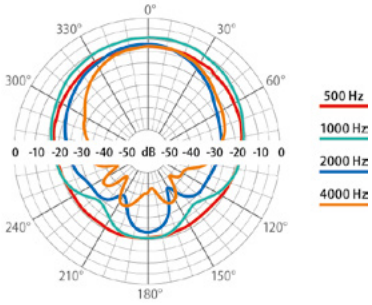

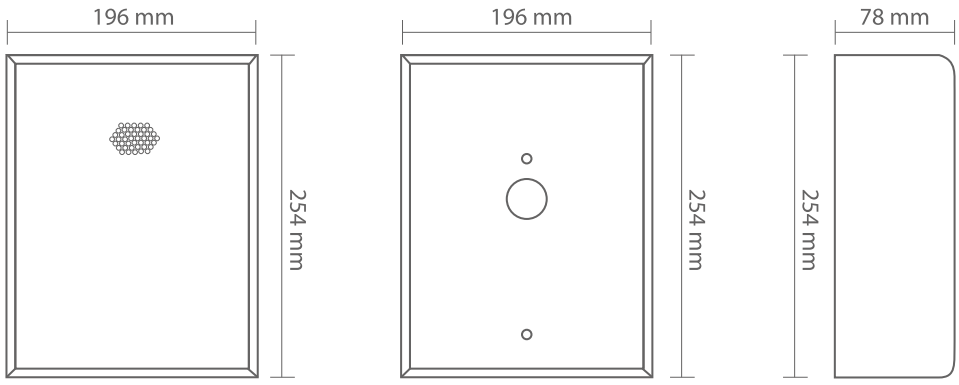

ABT-SW176/PA

SURFACE MOUNTED LOUDSPEAKER

- ✓ *Easy and quick to mount*
- ✓ *Modern and elegant design*
- ✓ *High quality sound of both speech and music*
- ✓ *Ideal for on-wall or on-ceiling mounting*
- ✓ *6 W transformer with multiple branches ensuring accurate selection of output power*
- ✓ *Available in white and black*

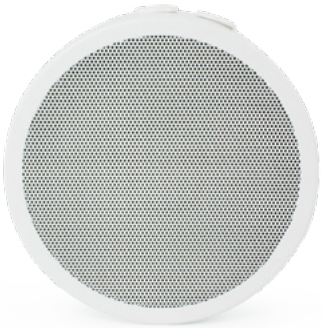

	ABT-SW176/PA
Electrical	
Rated power, W	6
Tappings 100 V line, W	6 / 3 / 1,5 / 0,75
Tappings 70 V line, W	3 / 1,5 / 0,75 / 0,37
Effective frequency range, Hz	130 – 20 000
SPL @ 1 m, 1 W, dB	91
SPL @ 1 m, rated power, dB	97
Dispersion at 500 Hz / 1 kHz / 2 kHz / 4 kHz, [°]	180 / 180 / 90 / 65
Environmental	
IP Rating	32
Min. / max. ambient temperature	-10°C / 55°C
Mechanical	
Dimensions, mm	Height 80, ø 170
Net weight, kg	1,2
Colour	White (RAL 9003) / Black (RAL 9011)
Material	Steel
Mounting	Screw

Frequency band:

Circular chart of directional characteristic:

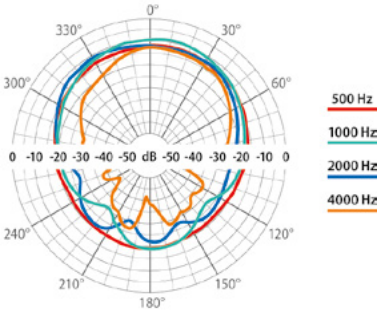

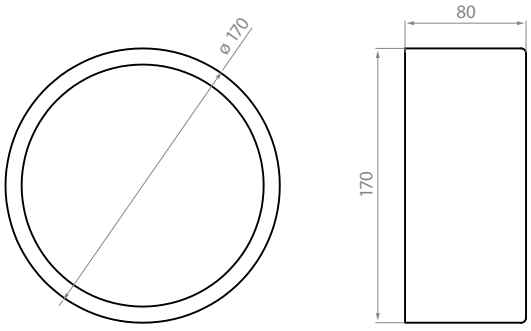

ABT-S186/PA

CEILING-MOUNTED LOUDSPEAKERS

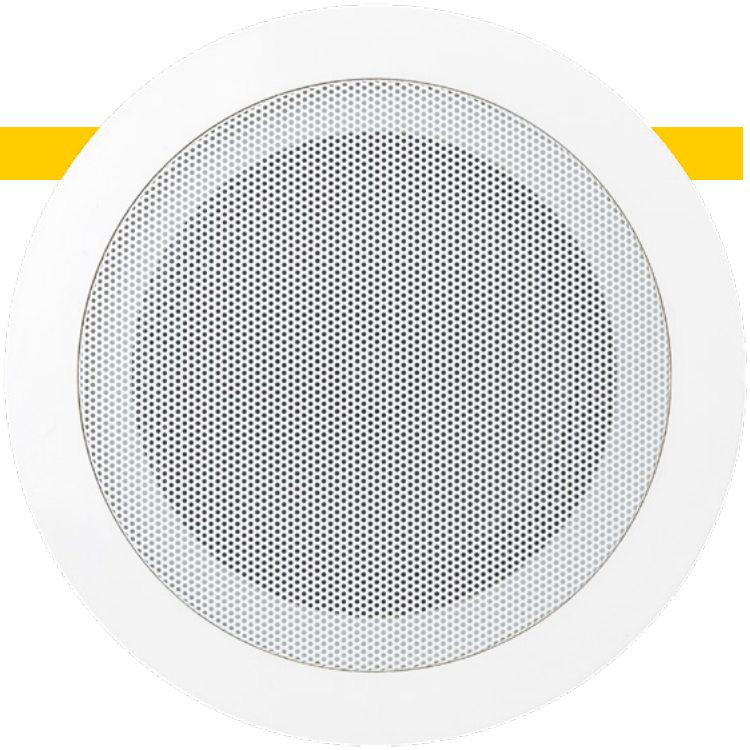

- ✓ *The highest level of speech intelligibility*
- ✓ *Elegant design*
- ✓ *6 W transformer allowing a precise selection of loudspeaker output power*

	ABT-S186/PA
Electrical	
Rated power, W	6
Tappings 100 V line, W	6 / 3 / 1,5 / 0,75
Tappings 70 V line, W	3 / 1,5 / 0,75 / 0,37
Effective frequency range, Hz	120 – 20 000
SPL @ 1 m, 1 W, dB	91
SPL @ 1 m, rated power, dB	99
Dispersion at 500 Hz / 1 kHz / 2 kHz / 4 kHz, [°]	180 / 180 / 150 / 90
Environmental	
IP rating	32C
Min. / max. ambient temperature	-10°C / 55°C
Mechanical	
Dimensions, mm	Height 75, ø 175
Net weight, kg	0,66
Colour	White (RAL 9003)
Material	ABS
Mounting	Spring clamp
Cut-out, mm	ø 150

Frequency band:

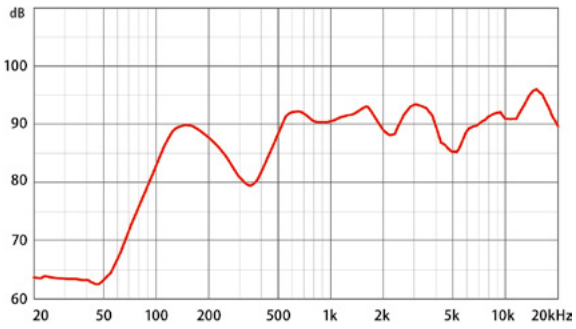

Circular chart of directional characteristic:

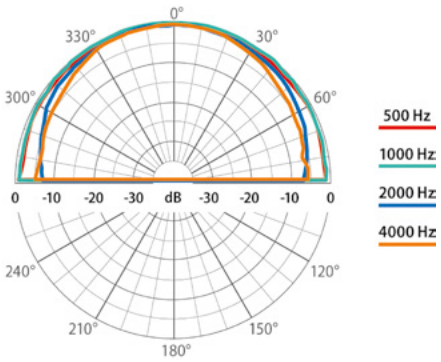

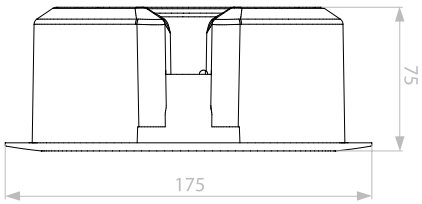

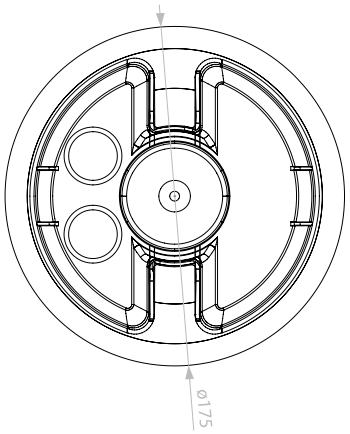

ABT-S206B/PA

CEILING-MOUNTED LOUDSPEAKERS

- ✓ *The highest level of speech intelligibility*
- ✓ *Elegant design*
- ✓ *6 W transformer allowing a precise selection of loudspeaker output power*
- ✓ *100% protection of line from breaks and short-circuits*
- ✓ *Available in white and black*

	ABT-S206B/PA
Electrical	
Rated power, W	6
Tappings 100 V line, W	6 / 3 / 1,5 / 0,75
Tappings 70 V line, W	3 / 1,5 / 0,75 / 0,37
Effective frequency range, Hz	120 – 20 000
SPL @ 1 m, 1 W, dB	93
SPL @ 1 m, rated power, dB	101
Dispersion at 500 Hz / 1 kHz / 2 kHz / 4 kHz, [°]	180 / 180 / 95 / 70
Environmental	
IP rating	32C
Min. / max. ambient temperature	-10°C / 55°C
Mechanical	
Dimensions, mm	Height 115, ø 199
Net weight, kg	1,13
Colour	White (RAL 9003) / Black (RAL 9011)
Material	Steel
Mounting	Spring clamp
Cut-out, mm	ø 175

Frequency band:

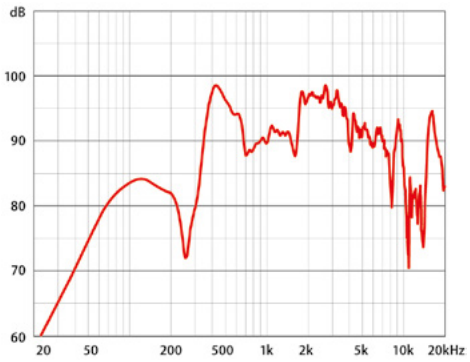

Circular chart of directional characteristic:

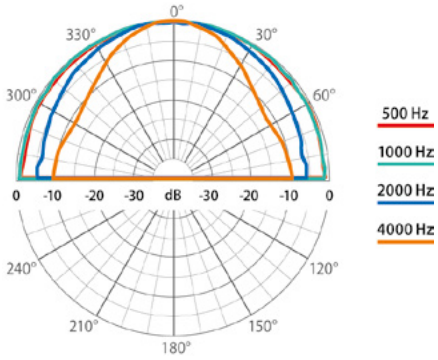

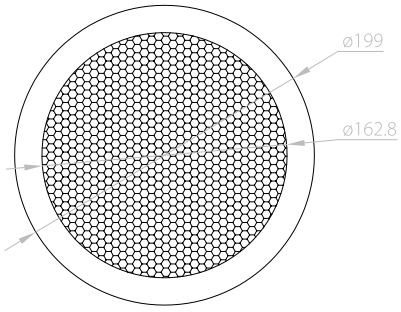

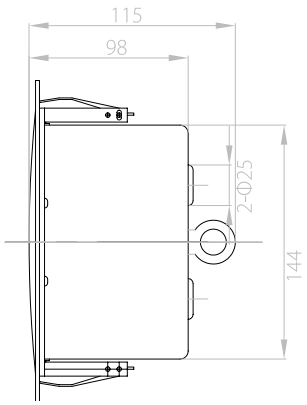

ABT-P10/PA / ABT-P10P/PA

SOUND PROJECTORS

- ✓ *Designed to achieve directional characteristic of sound emission*
- ✓ *10 W transformer with multiple branches ensuring accurate selection of output power*
- ✓ *Enclosed in an advance and functional cylindrical casing made of resistant and durable ABS*
- ✓ *Ideal for either ceiling or wall installation*
- ✓ *High sound quality in music and speech emission*

ABT-P10/PA

ABT-P10P/PA

	ABT-P10/PA	ABT-P10P/PA
Electrical		
Rated power, W	10	
Tappings 100 V, W	10 / 5 / 2,5 / 1,25	
Tappings 70 V line, W	5 / 2,5 / 1,25 / 0,625	
Effective frequency range, Hz	130 – 20000	
SPL @ 1 m, 1 W, dB	92	
SPL @ 1 m, rated power, dB	100	
Dispersion at 500 Hz / 1 kHz / 2 kHz / 4 kHz, [°]	360 / 210 / 120 / 65	
Environmental		
IP rating	66	
Min. / max. ambient temperature	-25°C / 70°C	
Mechanical		
Dimensions, mm	Length 205, ø 135	
Net weight, kg	1,6	2
Colour	White (RAL 9003)	
Material	ABS	
Mounting	Screw, U type bracket	Screw, pendant

Frequency band:

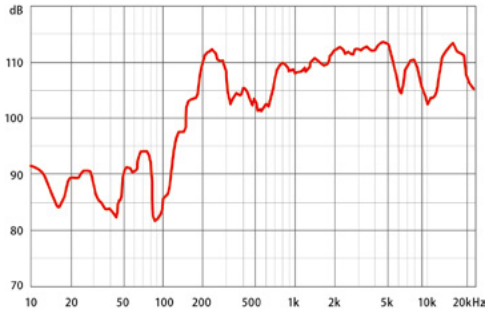

Circular chart of directional characteristic:

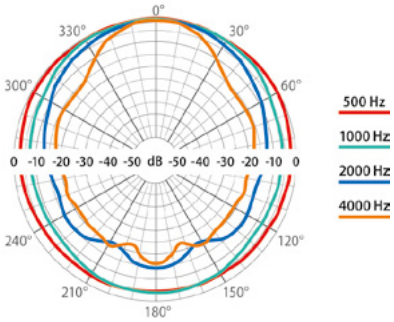

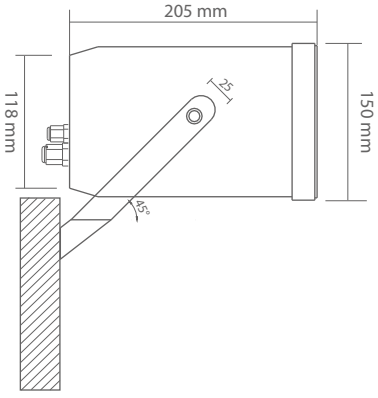

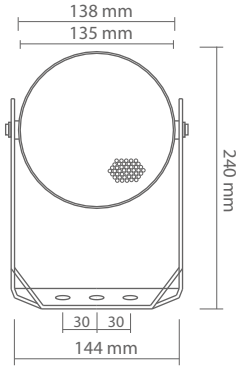

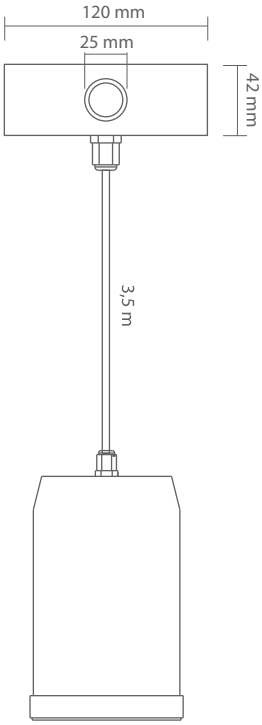

ABT-P20/PA / ABT-P20P/PA

SOUND PROJECTORS

- ✓ *Designed to achieve directional characteristic of sound emission*
- ✓ *20 W transformer with multiple branches ensuring accurate selection of output power*
- ✓ *Enclosed in an advance and functional cylindrical casing made of extruded aluminium*
- ✓ *Ideal for either ceiling or wall installation*
- ✓ *High sound quality in music and speech emission*

ABT-P20/PA

ABT-P20P/PA

	ABT-P20/PA	ABT-P20P/PA
Electrical		
Rated power, W	20	
Tappings 100 V, W	20 / 10 / 5 / 2,5	
Tappings 70 V line, W	10 / 5 / 2,5 / 1,25	
Effective frequency range, Hz	130 – 20000	
SPL @ 1 m, 1 W, dB	91	
SPL @ 1 m, rated power, dB	102	
Dispersion at 500 Hz / 1 kHz / 2 kHz / 4 kHz, [°]	360 / 230 / 110 / 65	
Environmental		
IP rating	66	
Min. / max. ambient temperature	-25°C / 70°C	
Mechanical		
Dimensions, mm	Length 210, ø 143	
Net weight, kg	2,4	2,8
Colour	White (RAL 9003)	
Material	Aluminium	
Mounting	Screw, U type bracket	Screw, pendant

Frequency band:

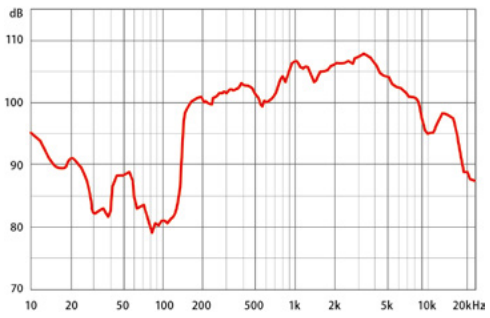

Circular chart of directional characteristic:

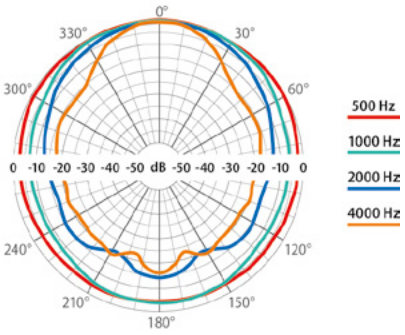

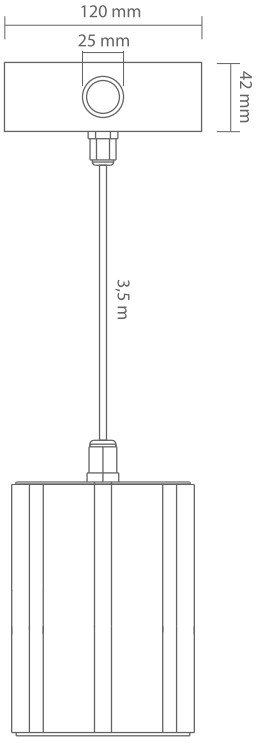

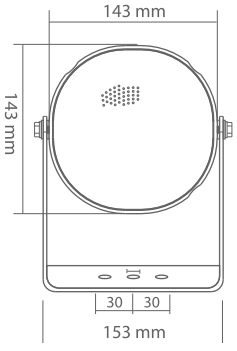

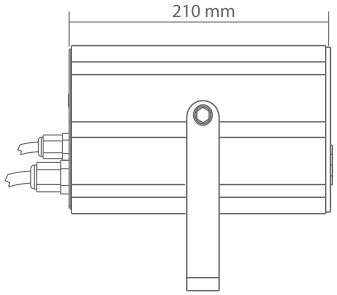

ABT-T1410/PA / ABT-T2015/PA

HORN-TYPE LOUDSPEAKERS

- ✓ *Directional characteristic of sound emission and the highest verbal communication understanding*
- ✓ *Wall and ceiling installation*
- ✓ *Protection from dust and humidity: IP66 rating*

	ABT-T1410/PA	ABT-T2015/PA
Electrical		
Rated power, W	10	15
Tappings 100 V line, W	10 / 5 / 2,5 / 1,25	15 / 7,5 / 3,75 / 1,87
Tappings 70 V line, W	5 / 2,5 / 1,25 / 0,62	7,5 / 3,75 / 1,87 / 0,94
Effective frequency range, Hz	400-6300	400-8000
SPL @ 1 m, 1 W, dB	93	99
SPL @ 1 m, rated power	101	109
Dispersion at 500 Hz / 1 kHz / 2 kHz / 4 kHz, [°]	360 / 355 / 97 / 54	360 / 132 / 68 / 33
Environmental		
IP rating	66	
Min. / max. ambient temperature	-25 °C / 70 °C	
Mechanical		
Dimensions, mm	Length 214, ø 140	Length 258, ø 200
Net weight, kg	1,2	1,5
Colour	Light grey (RAL 7035)	
Material	ABS	
Mounting	Screw, U type bracket	

Frequency band:

ABT-T1410/PA

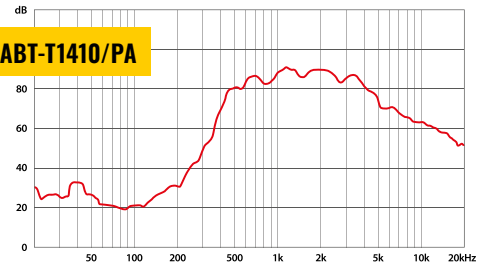

Circular chart of directional characteristic:

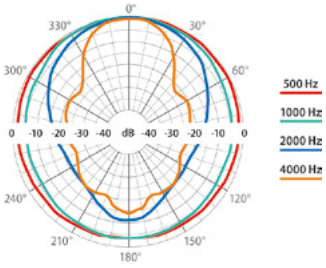

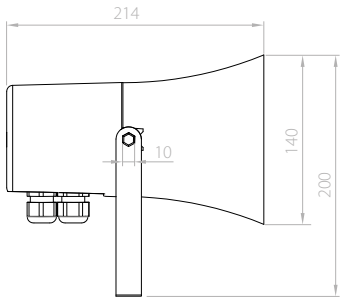

Frequency band:

ABT-T2015/PA

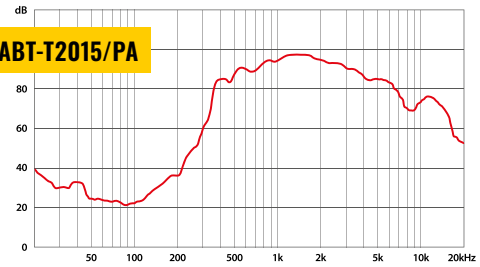

Circular chart of directional characteristic:

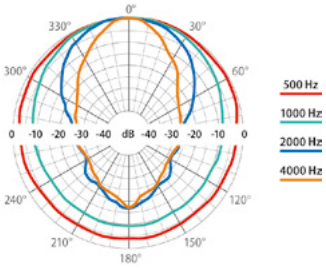

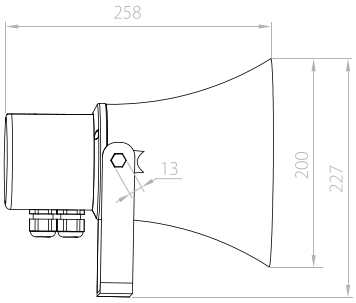

ABT-LA10B/PA / ABT-LA20B/PA ABT-LA30B/PA / ABT-LA40B/PA

LINE ARRAY LOUDSPEAKERS COLUMNS

- ✓ *Easy and quick installation*
- ✓ *High sound quality of both speech and music*
- ✓ *Highest level of speech intelligibility*
- ✓ *Ideal for mounting on a ceiling, wall or pole.*
- ✓ *Two cable inputs insulated with glands*
- ✓ *Weatherproof housing IP65*
- ✓ *For indoor and outdoor applications*

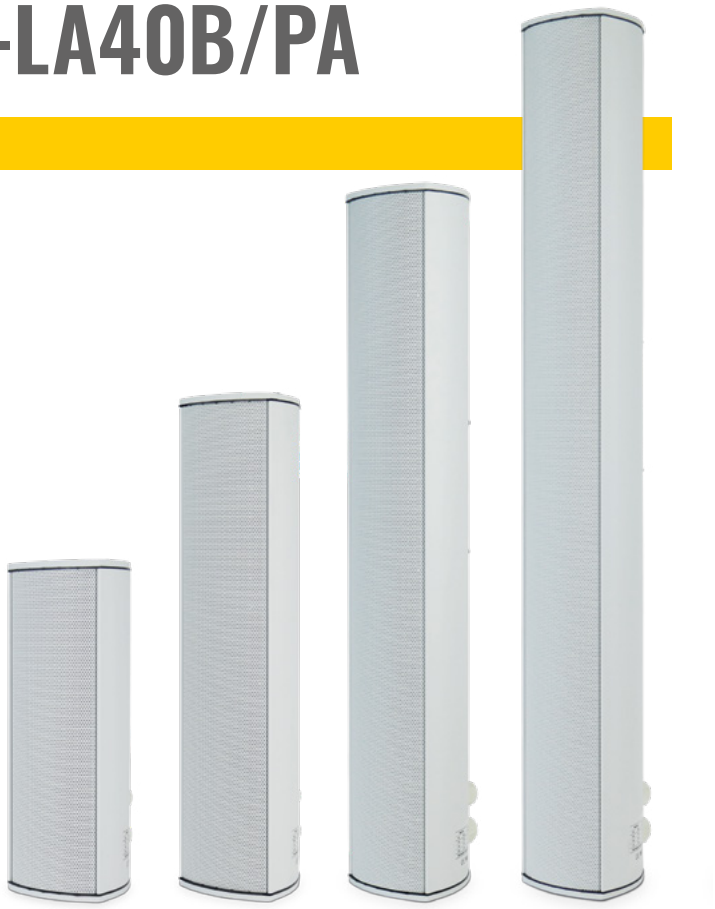

ABT-LA40B/PA

ABT-LA30B/PA

ABT-LA20B/PA

ABT-LA10B/PA

	ABT-LA10B/PA	ABT-LA20B/PA	ABT-LA30B/PA	ABT-LA40B/PA
Electrical				
Rated power, W	10	20	30	40
Tappings 100 V line, W	10 / 5 / 2,5	20 / 10 /5	30 / 15 / 7,5	40 / 20 / 10
Tappings 70 V line, W	5 / 2,5 / 1,25	10 / 5 / 2,5	15 / 7,5 / 3,75	20 / 10 / 5
Effective frequency range, Hz	150 – 15000*	150 – 15000*	150 – 15000*	150 – 15000*
SPL @ 1 m, 1 W, dB	90	91	93	92
SPL @ 1 m, Rated power, dB	99	104	106	108
Horizontal dispersion at 500 Hz / 1 kHz / 2 kHz / 4 kHz, [°]	360 / 190 / 140 / 120	360 / 190 / 140 / 120	360 / 190 / 140 / 120	360 / 180 / 130 / 110
Vertical dispersion at 500 Hz / 1 kHz / 2 kHz / 4 kHz, [°]	360 / 96 / 42 / 24	260 / 68 / 34 / 20	104 / 66 / 28 / 14	52 / 28 / 11 / 2
Environmental				
IP rating	IP65			
Min. / max. ambient temperature	-25°C / 55°C			
Mechanical				
Dimensions, mm	95 × 345 × 100	95 × 408 × 100	95 × 519 × 100	95 × 946 × 100
Colour	Light gray (RAL 7035)			
Material	Aluminium			
Impact Protection	IK07			
Mounting	Mounting screws, mounting bracket			

* using the manufacturer's recommended EQ settings

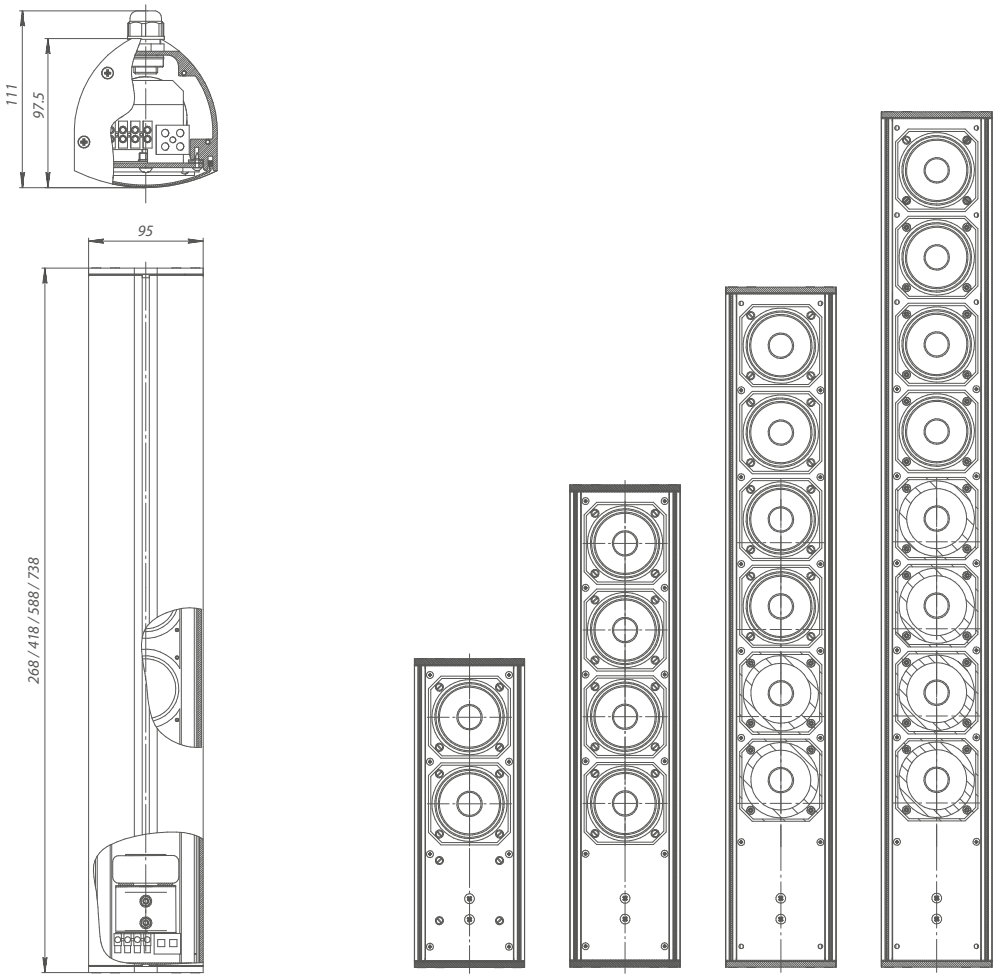

Public Address Power Amplifiers

ABT-PA2480AC / ABT-PA4480AC

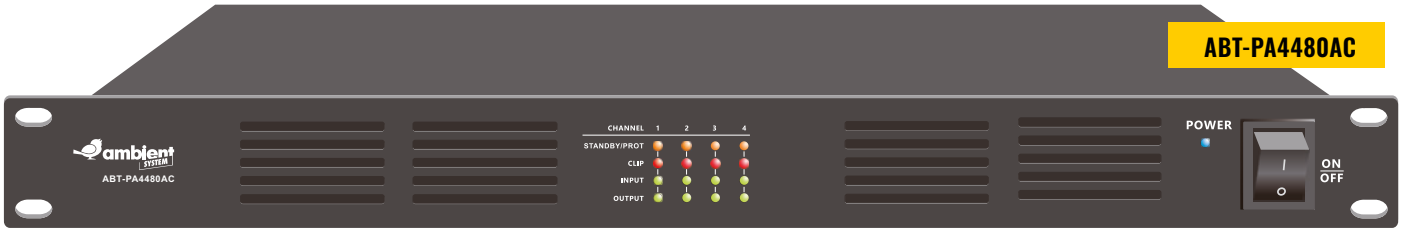

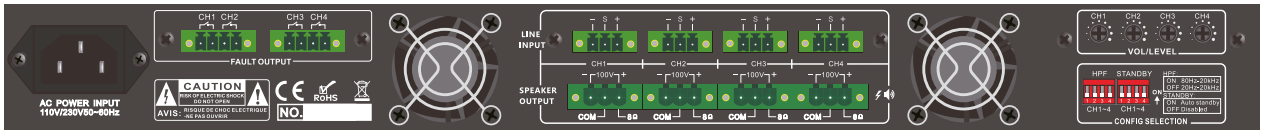

- ✓ *Two and four-channel Public Address amplifiers*
- ✓ *Output power of 480W per channel*
- ✓ *Class D technology ensures energy efficiency and high sound quality.*
- ✓ *High-pass filter tailored for better control over the sound characteristics.*
- ✓ *Standby Mode: Automatic sleep mode in the absence of audio signal, minimizing energy consumption.*
- ✓ *Logic outputs signaling errors for each channel, enabling quick identification and problem resolution.*
- ✓ *Compact 1U design allows easy integration with various audio systems.*
- ✓ *High performance for professional applications such as conference halls, industrial facilities, and shopping centers.*
- ✓ *Logic outputs facilitate quick diagnostics and maintenance to keep the system in excellent condition.*
- ✓ *Security systems provide protection against surges, overheating, and other issues*

MODELS	Description
ABT-PA2480AC	2 × 480 Watt class-D power amplifier
ABT-PA4480AC	4 × 480 Watt class-D power amplifier

	ABT-PA2480AC	ABT-PA4480AC
Description		
Product information	Class-D Two Channel Power Amplifier	Class-D Four Channel Power Amplifier
Electrical		
Rated Power Output	2x480W	4x480W
Speaker Output	8Ω & 100V	
Frequency Response	L/H Cut OFF 20Hz-20KHz (+1/-2dB)	
HPF	L/H Cut ON 70Hz-10KHz (+1/-3dB)	
Input	0.775V, 0dBu, balanced phoenix connector by two channels	0.775V, 0dBu, balanced phoenix connector by four channels
Input Impedance	10KΩ	
THD	< 0.1% (1KHz/-3dBv, 100W)	
S/N Ratio	> 80dB	
Crosstalk	> 60dB, 1KHz, Max output	
Power Consumption	1150W	2250W
Power Supply	AC input from 110V & 230V, 50-60Hz	
Mechanical		
Dimension	482(W) × 420(D) × 44(H) mm	
Weight	8.5 kg	10 kg

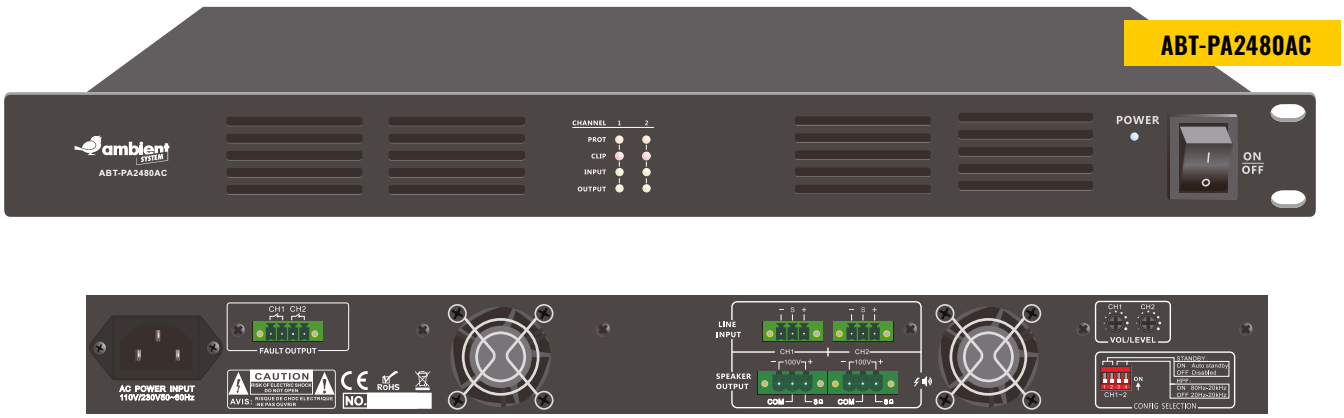

SOUND
AV
PA
AMBIENT
EVACUATION
VOICE
SYSTEM
PUBLIC ADDRESS
AMBIENT SYSTEM
PA
AV
SMART
PROFESSIONAL
INTELLIGENT
EN 54-16
EN 54-24
ABT
QUALITY
SAFETY
SECURITY
AUDIO
VIDEO
INNOVATIVE
EXPERIENCE
CONVENIENT
FLEXIBILITY
RELIABILITY
POWER
CLARITY
SIMPLICITY
WORLDWIDE
INTEGRATION
VERSATILITY
ACOUSTIC TREATMENT
ENTERTAINMENT
LOUDSPEAKERS
LOUD
PEAK
DSP
CONTROL
INNOVATIVE
SOUND
AMBIENT
PROFESSIONAL
SMART
INTELLIGENT
SAFETY
SECURITY
EXPERIENCE
INTEGRATION
VERSATILITY
POWER
CLARITY
SIMPLICITY
FLEXIBILITY
RELIABILITY
WORLDWIDE
QUALITY
ABT
AV
PA
EN 54-16
EN 54-24
AUDIO
VIDEO
ACOUSTIC TREATMENT
ENTERTAINMENT
LOUDSPEAKERS
CONTROL
INNOVATIVE
SOUND
AMBIENT
PROFESSIONAL
SMART
INTELLIGENT
SAFETY
SECURITY
EXPERIENCE
INTEGRATION
VERSATILITY
POWER
CLARITY
SIMPLICITY
FLEXIBILITY
RELIABILITY
WORLDWIDE
QUALITY
ABT
AV
PA
EN 54-16
EN 54-24
AUDIO
VIDEO
ACOUSTIC TREATMENT
ENTERTAINMENT
LOUDSPEAKERS
CONTROL
INNOVATIVE
SOUND

We make everyday life safer

Ambient System products are continually improved. All specifications are therefore subject to change without prior notice.

EN / 04.2025

AMBIENT SYSTEM Sp. z o.o. | ul. Bysewska 27, 80-298 Gdańsk, Poland | T: +48 58 345 51 95 | ambient@ambientsystem.pl | www.ambientsystem.eu